List ADT & Linked Lists

Slides by Andrew Yang

Objectives

1. Able to define a List ADT
2. Able to implement a List ADT with array
3. Able to implement a List ADT with linked list
4. Able to use Java API LinkedList class

Outline

1. Use of a List (Motivation)
   - List ADT
2. List ADT Implementation via Array
   - Adding and removing elements in an array
   - Time and space efficiency
3. List ADT Implementation via Linked Lists
   - Linked list approach
   - ListNode class: forming a linked list with ListNode
   - BasicLinkedList
4. More Linked Lists
   - EnhancedLinkedList, TailedLinkedList
5. Other Variants
   - CircularLinkedList, DoublyLinkedList

1 Use of a List

Motivation

Motivation

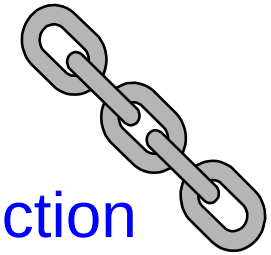

- **List** is one of the most basic types of data collection
  - For example, list of groceries, list of modules, list of friends, etc.
  - In general, we keep items of the same type (class) in one list
- Typical Operations on a data collection
  - Add data
  - Remove data
  - Query data
  - The details of the operations vary from application to application. The overall theme is the management of data

ADT of a List (1/3)

- A list ADT is a dynamic linear data structure
  - A collection of data items, accessible one after another starting from the beginning (head) of the list
- Examples of List ADT operations:
  - Create an empty list
  - Determine whether a list is empty
  - Determine number of items in the list
  - Add an item at a given position
  - Remove an item at a position
  - Remove all items
  - Read an item from the list at a position
- The next slide on the basic list interface does not have all the above operations… we will slowly build up these operations in list beyond the basic list.

ADT of a List (2/3)

ListInterface.java

```
import java.util.*;

public interface ListInterface <E> {
  public boolean isEmpty();
  public int     size();
  public E       getFirst() throws EmptyListException;
  public boolean contains(E item);
  public void    addFirst(E item);
  public E       removeFirst()
                       throws EmptyListException;
  public void    print();
}
```

- The **ListInterface** above defines the operations (methods) we would like to have in a List ADT
- The operations shown here are just a small sample. An actual List ADT usually contains more operations.

ADT of a List (3/3)

- We will examine 2 implementations of list ADT, both using the **ListInterface** shown in the previous slide

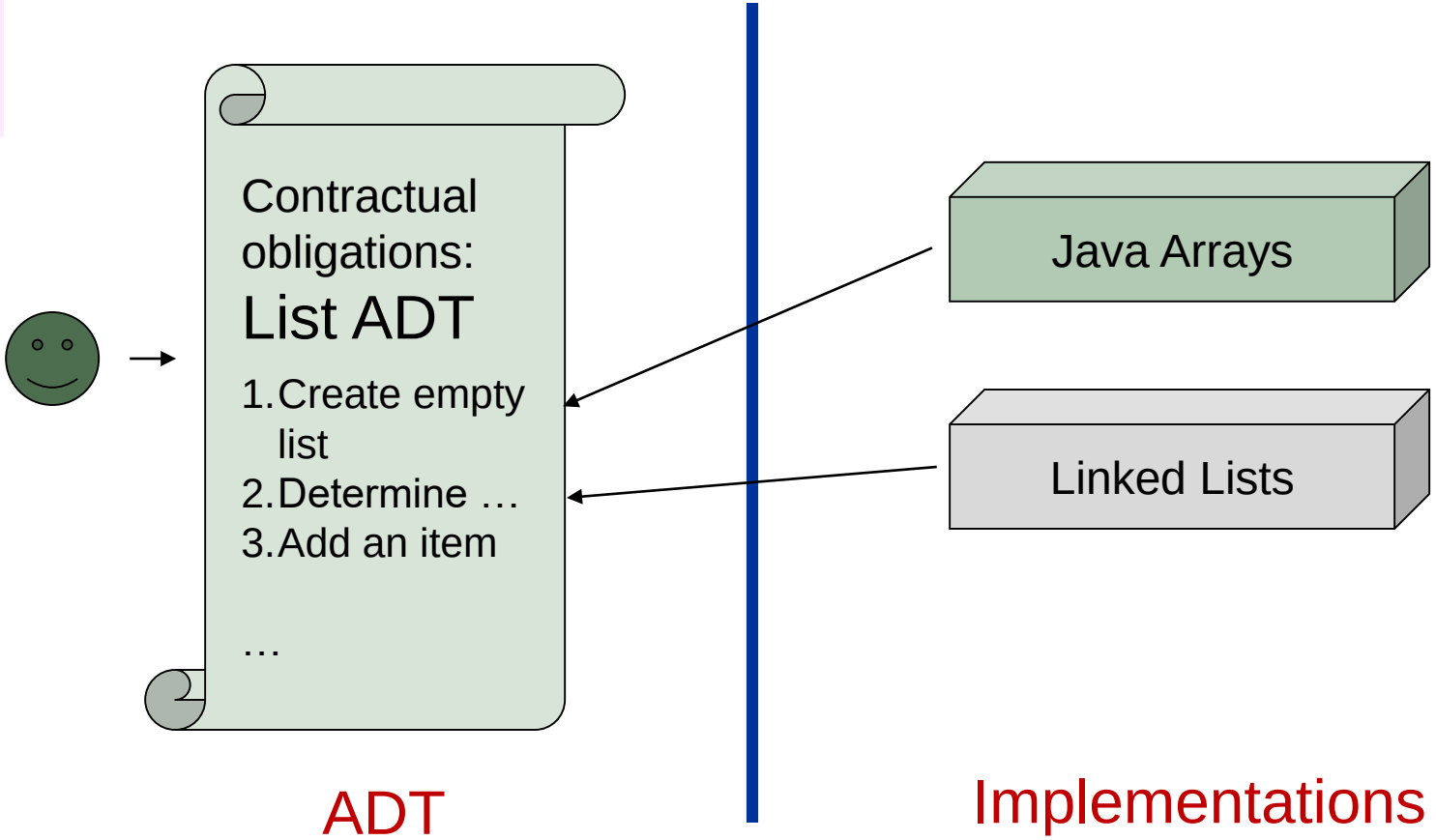

2 List Implementation via Array

Fixed-size list

2. List Implementation: Array (1/9)

- This is a straight-forward approach
  - Use Java array of a sequence of *n* elements

num_nodes

n

arr : array[0..m] of locations

a_0	a_1	a_2	……	a_{n-1}	***unused***
0	*1*	*2*		*n-1*	*m*

2. List Implementation: Array (2/9)

- We now create a class ListUsingArray as an implementation of the interface ListInterface (a user-defined interface, as defined in slide 9)

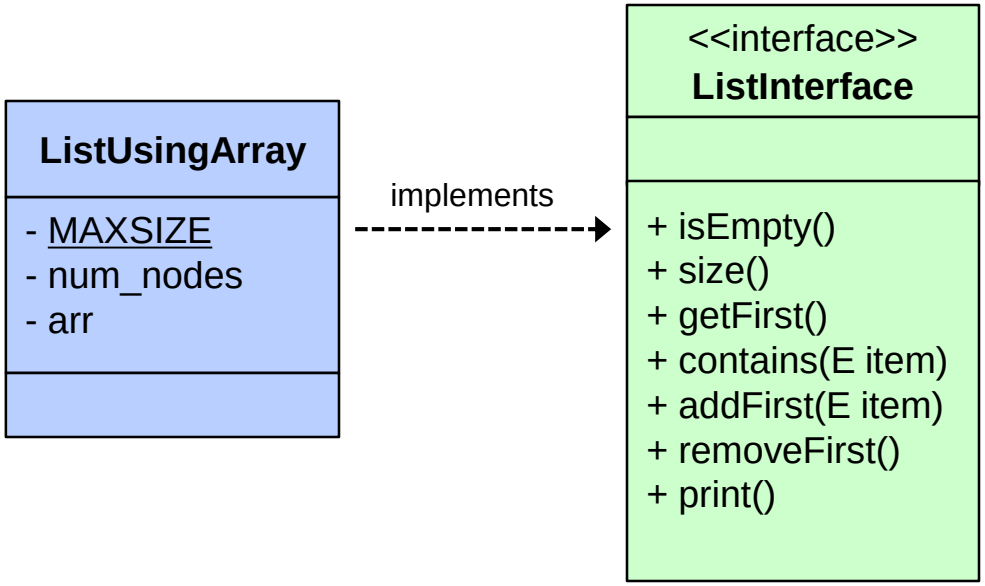

2. List Implementation: Array (3/9)

ListUsingArray.java

```
import java.util.*;

class ListUsingArray <E> implements ListInterface <E> {
  private static final int MAXSIZE = 1000;
  private int num_nodes = 0;
  private E[] arr = (E[]) new Object[MAXSIZE];

  public boolean isEmpty() { return num_nodes==0; }
  public int size()        { return num_nodes; }

  public E getFirst() throws EmptyListException {
    if (num_nodes == 0)
      throw new EmptyListException("can't get from an empty list");
    else return arr[0];
  }

  public boolean contains(E item) {
    for (int i = 0; i < num_nodes; i++)
      if (arr[i].equals(item)) return true;

    return false;
  }
```

2. List Implementation: Array (4/9)

- For insertion into first position, need to shift "right" (starting from the last element) to create room

  Example: addFirst("it")

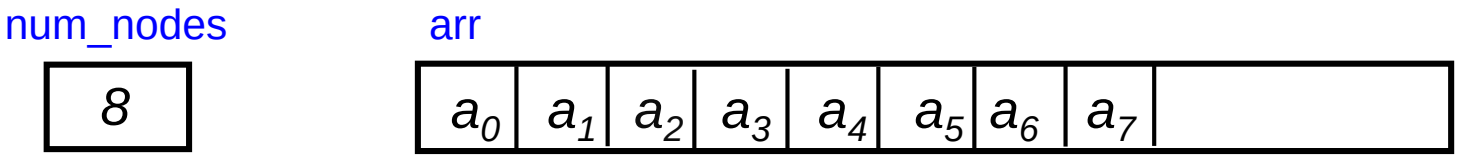

2. List Implementation: Array (4/9)

- For insertion into first position, need to shift "right" (starting from the last element) to create room

  Example: addFirst("it")

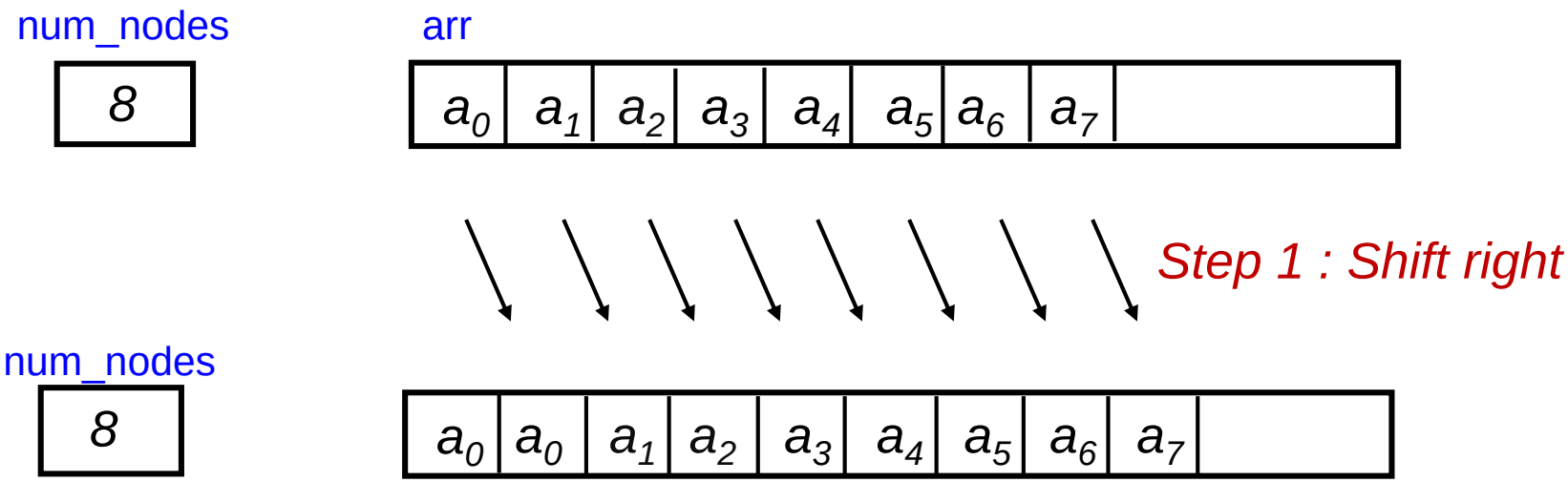

2. List Implementation: Array (4/9)

- For insertion into first position, need to shift "right" (starting from the last element) to create room

  Example: addFirst("it")

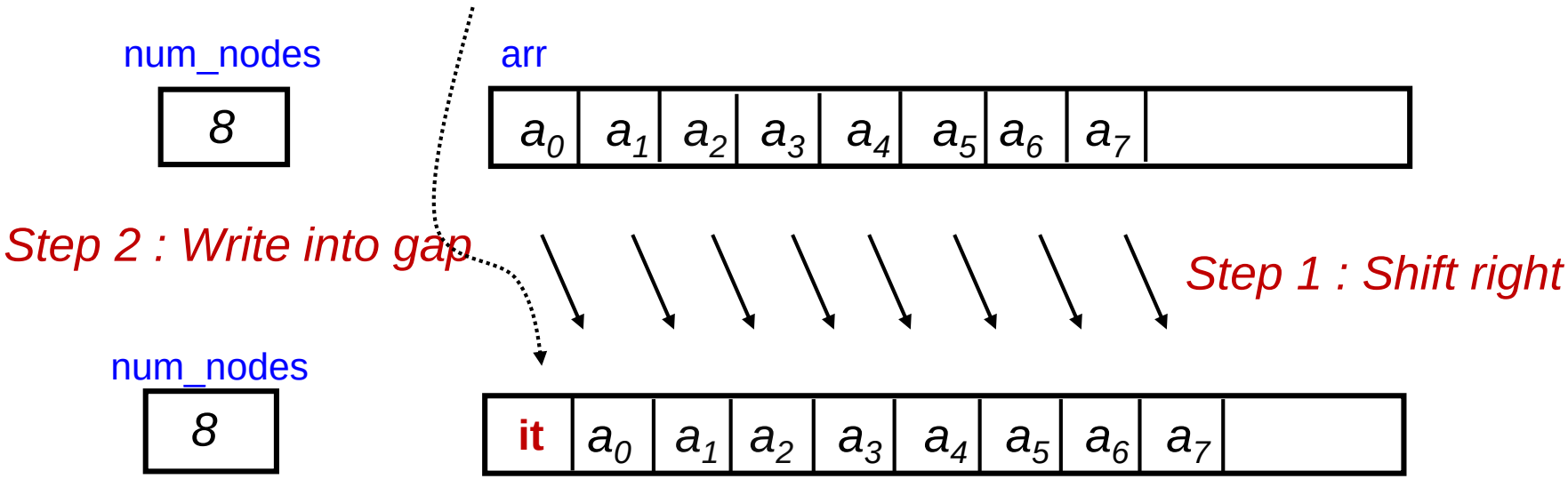

2. List Implementation: Array (4/9)

- For insertion into first position, need to shift "right" (starting from the last element) to create room

  Example: addFirst("it")

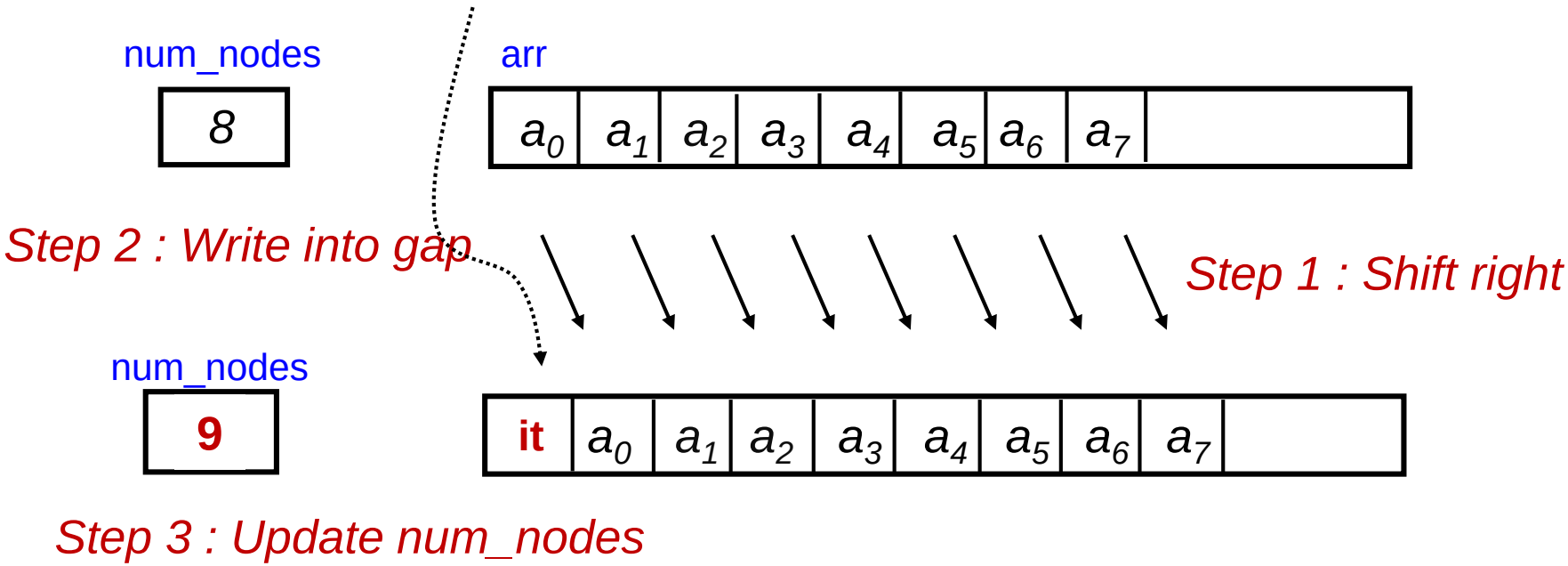

2. List Implementation: Array (5/9)

- For deletion of first element, need to shift "left" (starting from the first element) to close gap

  Example: removeFirst()

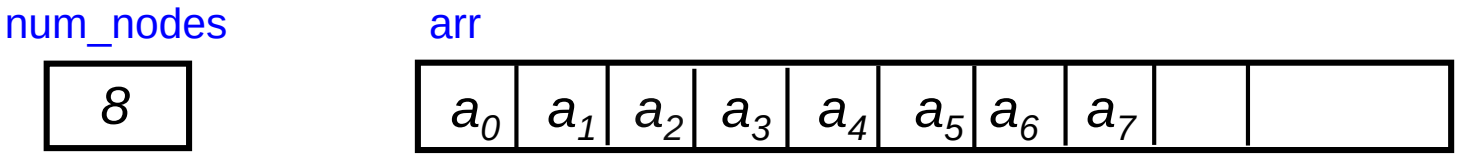

2. List Implementation: Array (5/9)

- For deletion of first element, need to shift "left" (starting from the first element) to close gap

  Example: removeFirst()

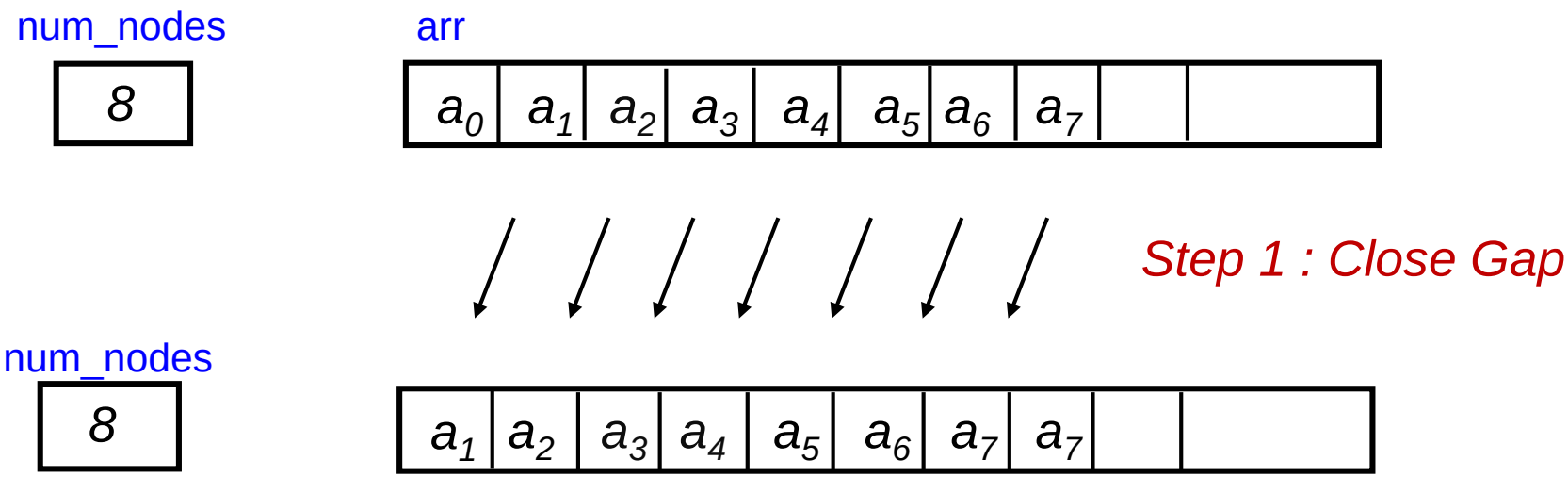

2. List Implementation: Array (5/9)

- For deletion of first element, need to shift "left" (starting from the first element) to close gap

  Example: removeFirst()

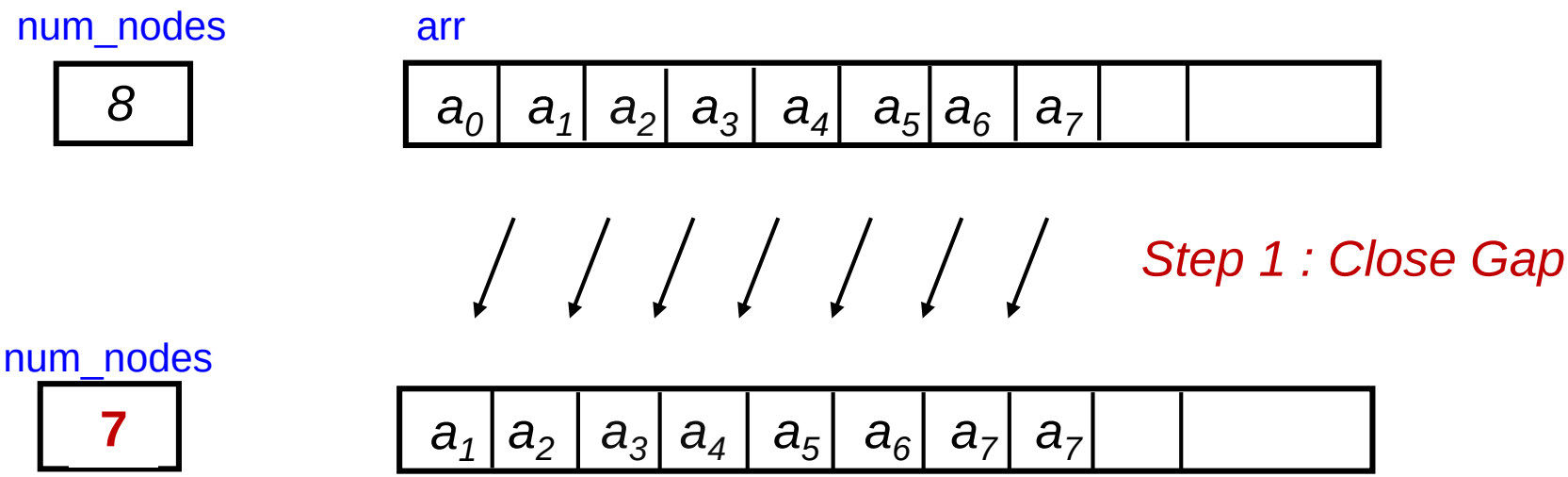

Step 2 : Update num_nodes

2. List Implementation: Array (5/9)

- For deletion of first element, need to shift "left" (starting from the first element) to close gap

  Example: removeFirst()

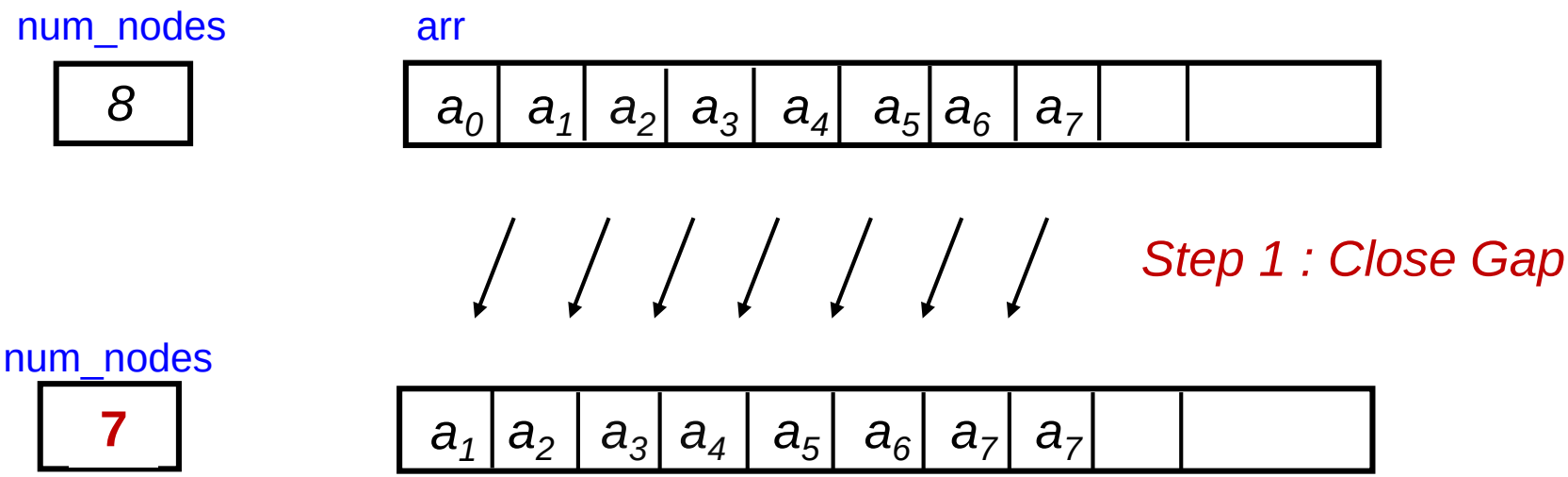

Step 2 : Update num_nodes

2. List Implementation: Array (5/9)

- For deletion of first element, need to shift "left" (starting from the first element) to close gap

  Example: removeFirst()

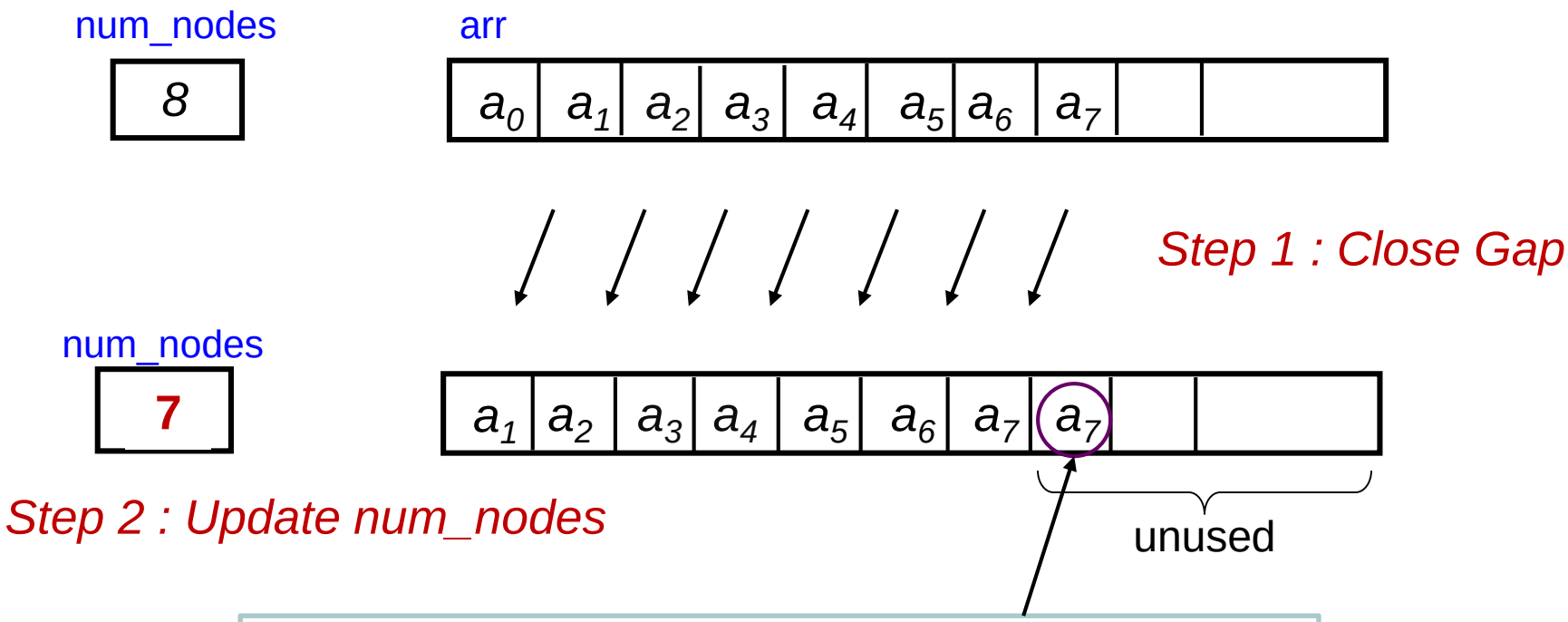

Need to maintain *num_nodes* so that program would not access beyond the valid data.

2. List Implementation: Array (6/9)

```
public void addFirst(E item) throws FullListException {
  if (num_nodes == MAXSIZE)
    throw new FullListException("insufficient space for add");
  for (int i = num_nodes-1; i >= 0; i--)
    arr[i+1] = arr[i]; // to shift elements to the right

  arr[0] = item;
  num_nodes++; // update num_nodes
}

public E removeFirst() throws EmptyListException {
  if (num_nodes == 0)
    throw new EmptyListException("can't remove from an empty list");
  else {
    E tmp = arr[0];
    for (int i = 0; i<num_nodes-1; i++)
      arr[i] = arr[i+1]; // to shift elements to the left
    num_nodes--; // update num_nodes
    return tmp;
  }
}
```

ListUsingArray.java

2. Analysis of Array Impl^n of List (8/9)

- Question: Time Efficiency?
  - Retrieval: getFirst()
  - Insertion: addFirst(E item)
  - Insertion: add(int index, E item)
    - Inserting into the specified position
  - Deletion: removeFirst(E item)
  - Deletion: remove(int index)
    - Delete the item at the specified position

2. Analysis of Array Impl^n of List (8/9)

- Question: Time Efficiency?
  - Retrieval: getFirst()
    - Always fast with 1 read operation
  - Insertion: addFirst(E item)
  - Insertion: add(int index, E item)
    - Inserting into the specified position
  - Deletion: removeFirst(E item)
  - Deletion: remove(int index)
    - Delete the item at the specified position

2. Analysis of Array Impl^n of List (8/9)

- Question: Time Efficiency?
  - Retrieval: getFirst()
    - Always fast with 1 read operation
  - Insertion: addFirst(E item)
    - Shifting of all *n* items – bad!
  - Insertion: add(int index, E item)
    - Inserting into the specified position
  - Deletion: removeFirst(E item)
  - Deletion: remove(int index)
    - Delete the item at the specified position

2. Analysis of Array Impl^n of List (8/9)

- Question: Time Efficiency?
  - Retrieval: getFirst()
    - Always fast with 1 read operation
  - Insertion: addFirst(E item)
    - Shifting of all *n* items – bad!
  - Insertion: add(int index, E item)
    - Inserting into the specified position
      - Best case: No shifting of items (add to the last place)
      - Worst case: Shifting of all items (add to the first place)
  - Deletion: removeFirst(E item)
  - Deletion: remove(int index)
    - Delete the item at the specified position

2. Analysis of Array Impl^n of List (8/9)

- Question: Time Efficiency?
  - Retrieval: getFirst()
    - Always fast with 1 read operation
  - Insertion: addFirst(E item)
    - Shifting of all *n* items – bad!
  - Insertion: add(int index, E item)
    - Inserting into the specified position
      - Best case: No shifting of items (add to the last place)
      - Worst case: Shifting of all items (add to the first place)
  - Deletion: removeFirst(E item)
    - Shifting of all *n* items – bad!
  - Deletion: remove(int index)
    - Delete the item at the specified position

2. Analysis of Array Impl^n of List (8/9)

- Question: Time Efficiency?
  - Retrieval: getFirst()
    - Always fast with 1 read operation
  - Insertion: addFirst(E item)
    - Shifting of all *n* items – bad!
  - Insertion: add(int index, E item)
    - Inserting into the specified position
      - Best case: No shifting of items (add to the last place)
      - Worst case: Shifting of all items (add to the first place)
  - Deletion: removeFirst(E item)
    - Shifting of all *n* items – bad!
  - Deletion: remove(int index)
    - Delete the item at the specified position
      - Best case: No shifting of items (delete the last item)
      - Worst case: Shifting of all items (delete the first item)

2. Analysis of Array Impl^n of List (9/9)

- Question: What is the Space Efficiency?
  - Size of array collection limited by MAXSIZE
  - Problems
    - We don't always know the maximum size ahead of time
    - If MAXSIZE is too liberal, unused space is wasted
    - If MAXSIZE is too conservative, easy to run out of space
- Solution: Growable Array (doubling strategy)
  - No more limits on size
  - amortized analysis…
- When to use such a list?
  - For a fixed-size list with limited insertions and deletions, an array may be good enough!
  - For a variable-size list, where dynamic operations such as insertion/deletion are common, an array is a poor choice; better alternative – **Linked List**

3 List Implementation via Linked List

Variable-size list

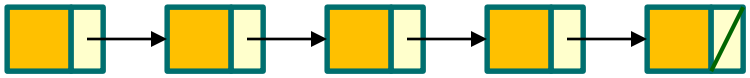

3.1 List Implementation: Linked List (1/3)

- Recap when using an array...
  - X, A, B are elements of an array
  - Y is new element to be added

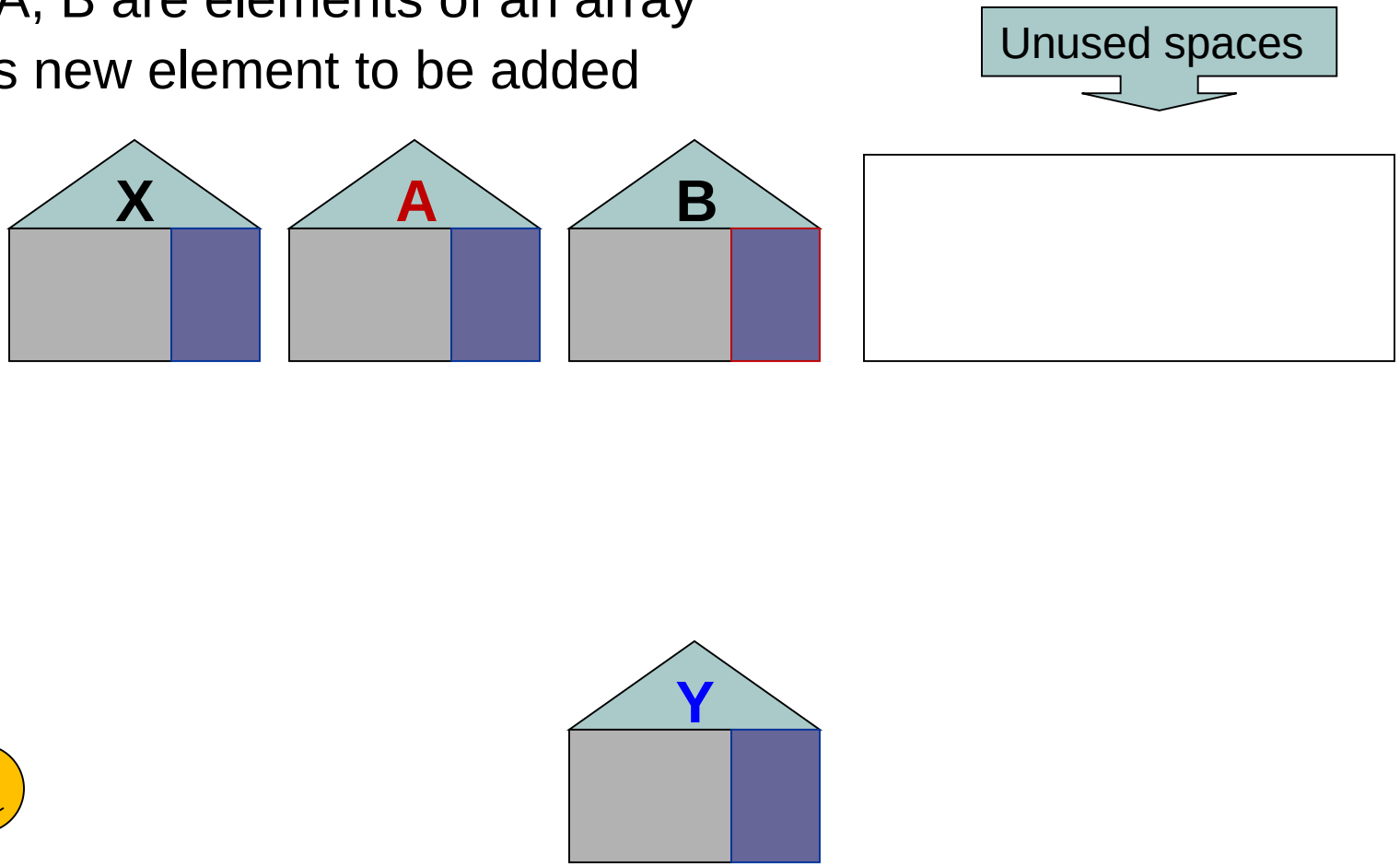

3.1 List Implementation: Linked List (1/3)

- Recap when using an array...
  - X, A, B are elements of an array
  - Y is new element to be added

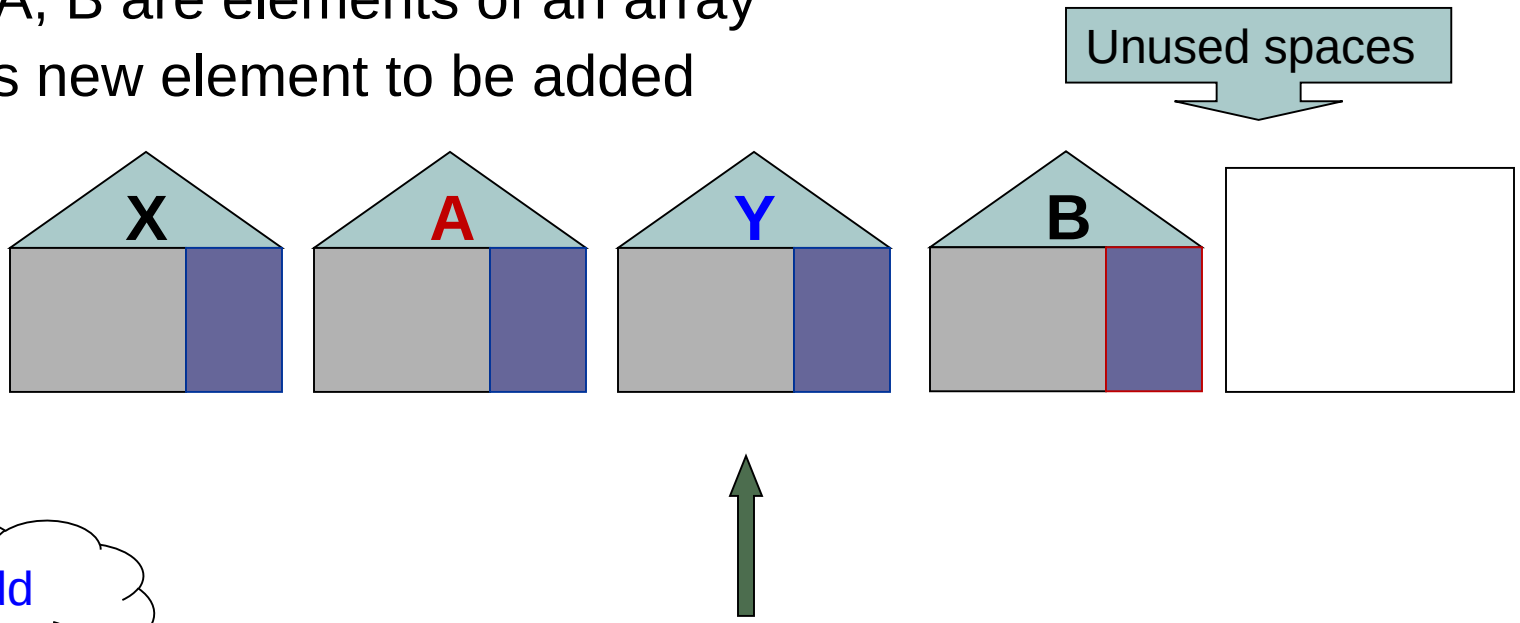

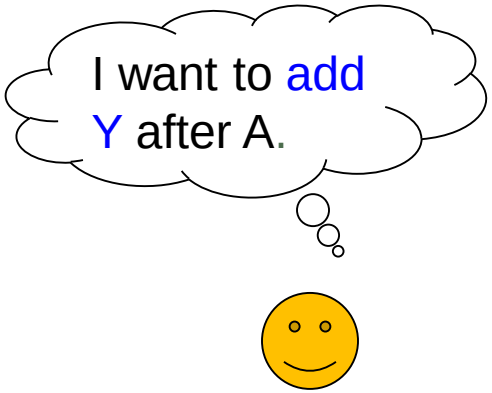

3.1 List Implementation: Linked List (1/3)

- Recap when using an array...
  - X, A, B are elements of an array
  - Y is new element to be added

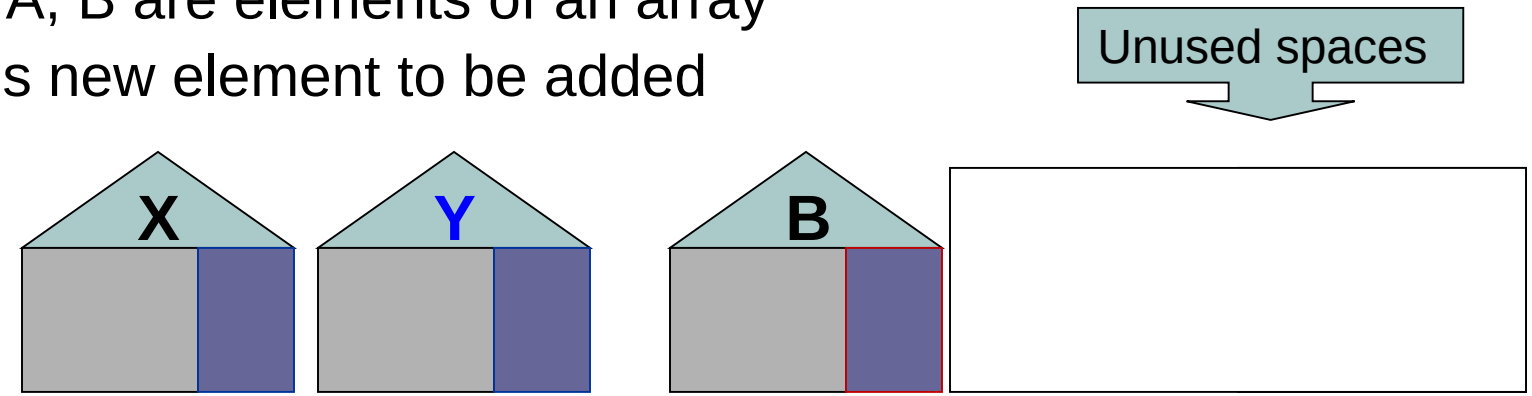

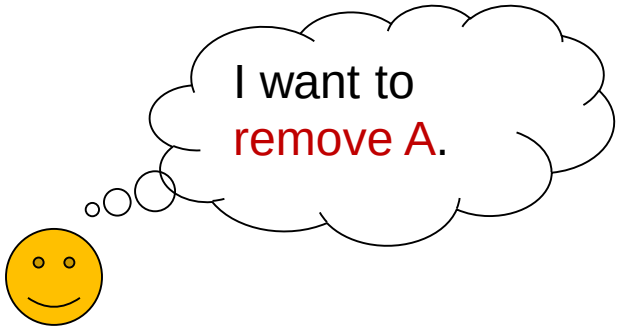

3.1 List Implementation: Linked List (2/3)

- Now, we see the (add) action with linked list…
  - X, A, B are nodes of a linked list
  - Y is new node to be added

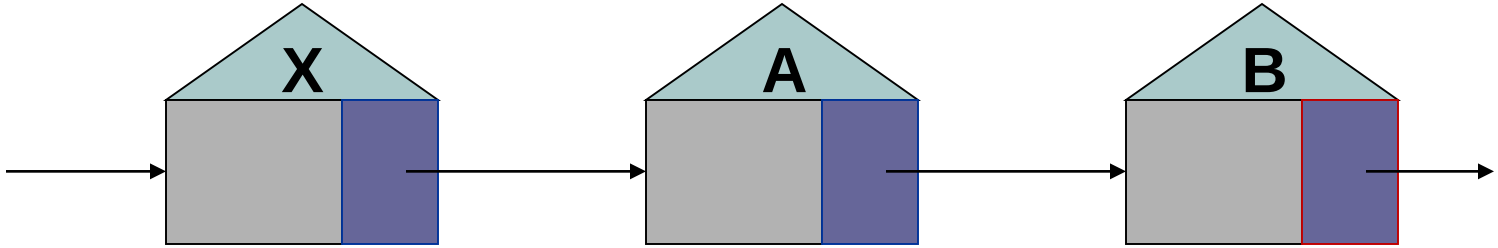

3.1 List Implementation: Linked List (2/3)

- Now, we see the (add) action with linked list…
  - X, A, B are nodes of a linked list
  - Y is new node to be added

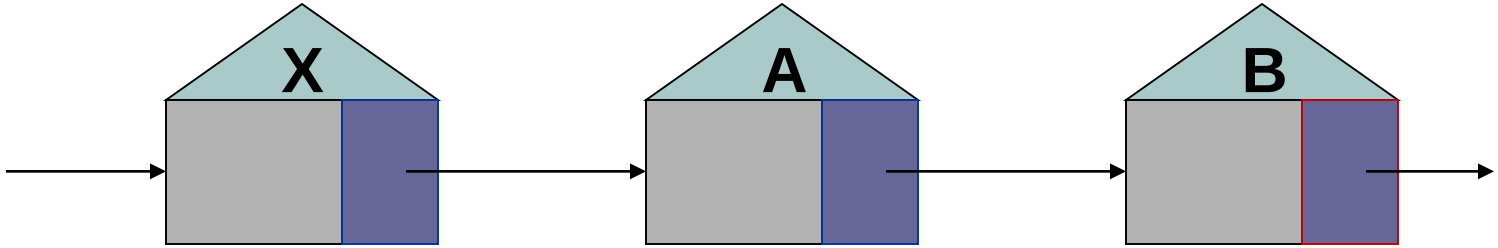

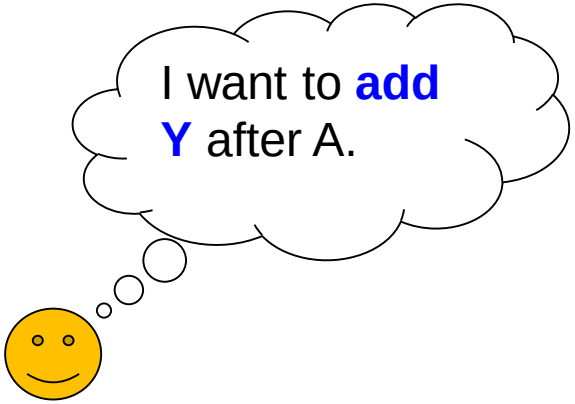

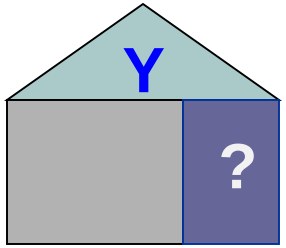

3.1 List Implementation: Linked List (2/3)

- Now, we see the (add) action with linked list…
  - X, A, B are nodes of a linked list
  - Y is new node to be added

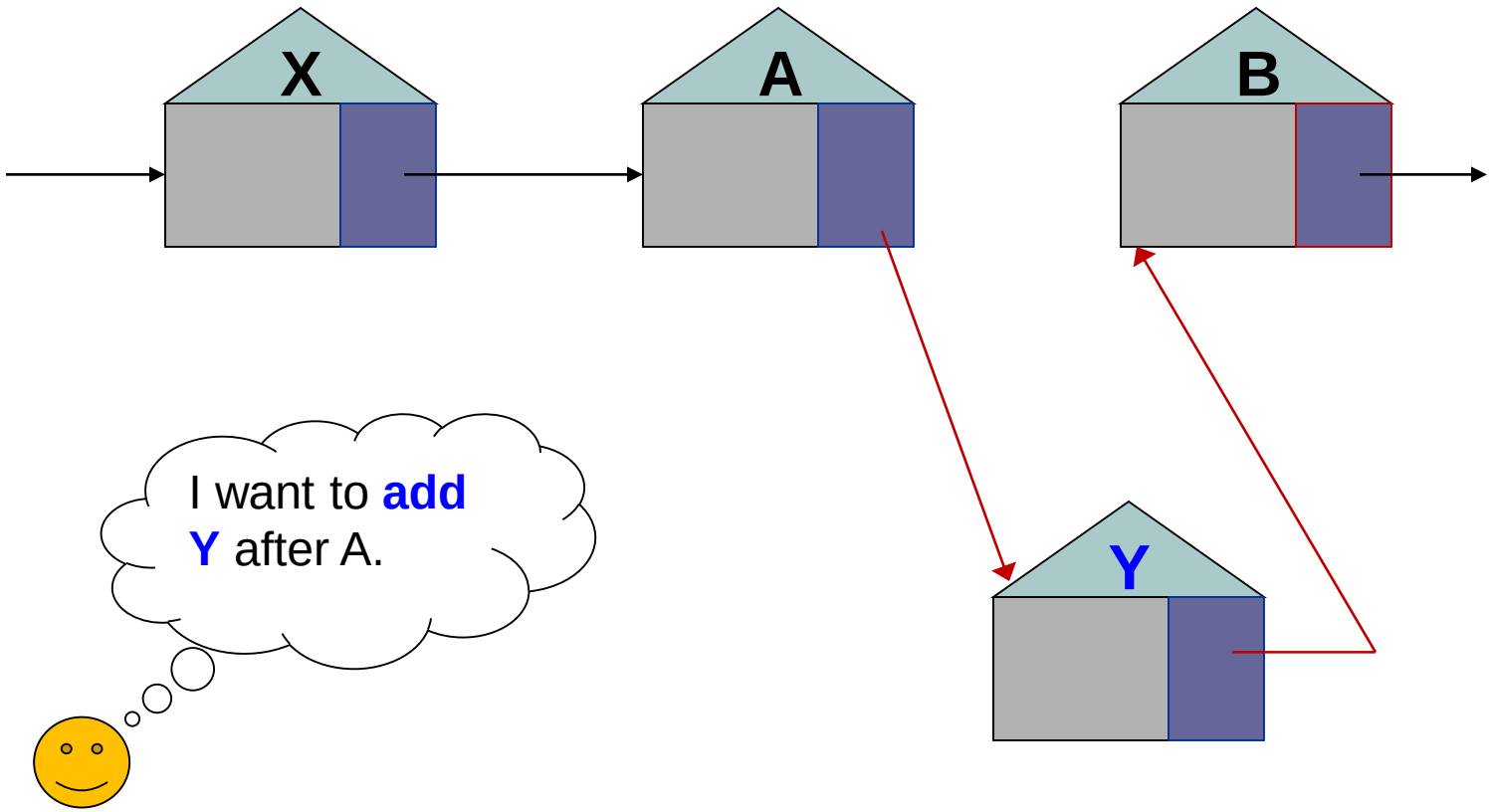

3.1 List Implementation: Linked List (3/3)

- Now, we see the (remove) action with linked list…

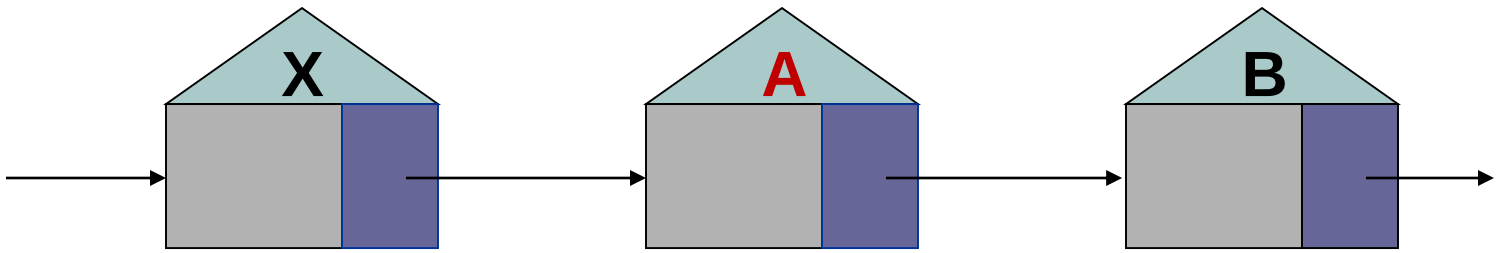

3.1 List Implementation: Linked List (3/3)

- Now, we see the (remove) action with linked list…

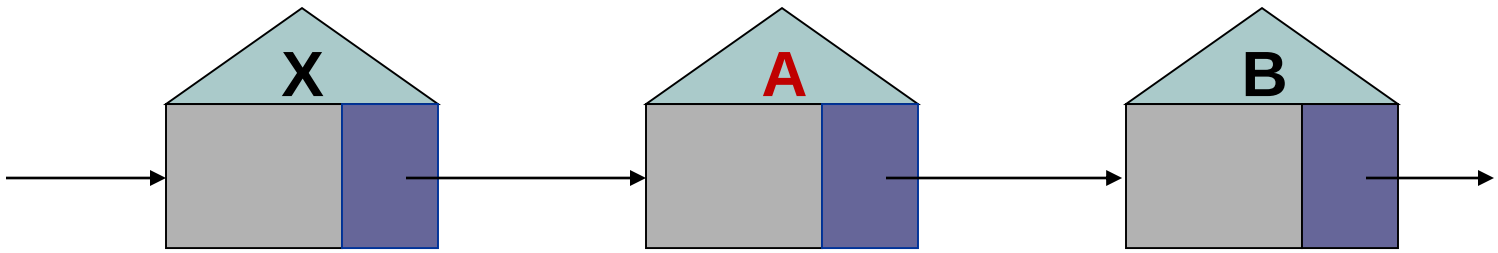

3.1 List Implementation: Linked List (3/3)

- Now, we see the (remove) action with linked list…

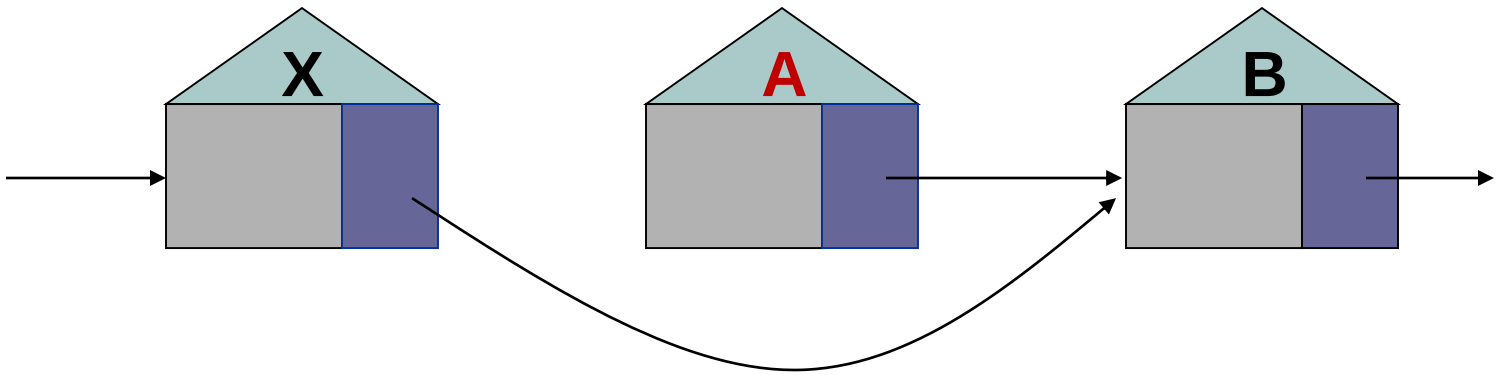

3.1 List Implementation: Linked List (3/3)

- Now, we see the (remove) action with linked list…

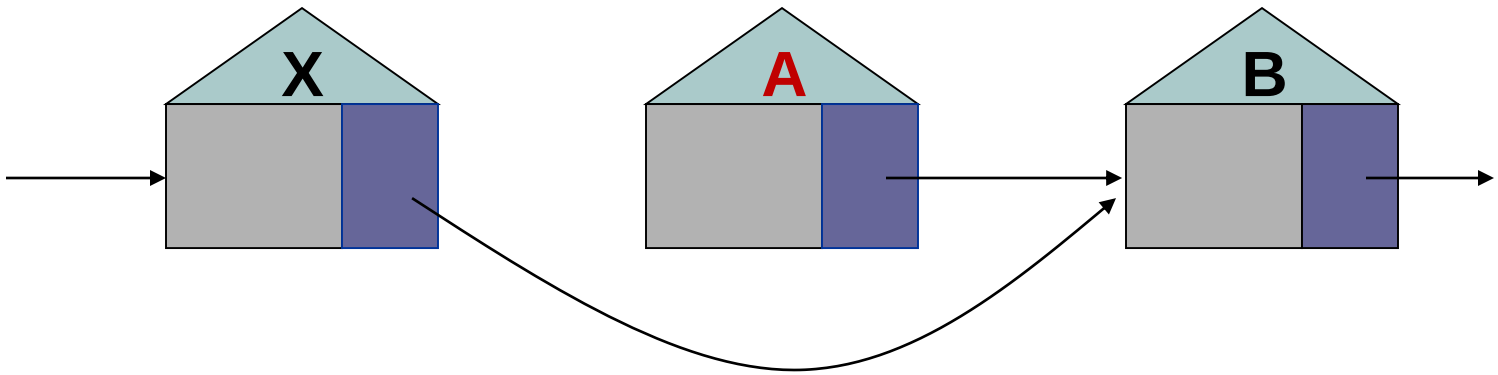

Node A becomes a *garbage*. To be removed during garbage collection.

3.2 Linked List Approach (1/4)

- Idea
  - Each element in the list is stored in a *node*, which also contains a next pointer
  - Allow elements in the list to occupy *non-contiguous* memory
  - Order the nodes by associating each with its neighbour(s)

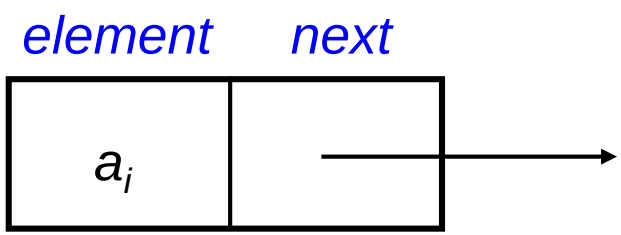

This is one node
of the collection…

3.2 Linked List Approach (1/4)

- Idea
  - Each element in the list is stored in a *node*, which also contains a next pointer
  - Allow elements in the list to occupy *non-contiguous* memory
  - Order the nodes by associating each with its neighbour(s)

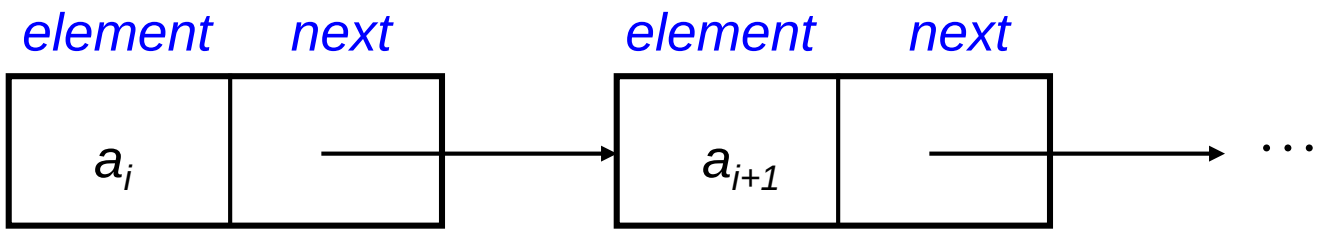

This is one node of the collection…

… and this one comes after it in the collection (most likely not occupying contiguous memory that is next to the previous node).

3.2 Linked List Approach (1/4)

- Idea
  - Each element in the list is stored in a *node*, which also contains a next pointer
  - Allow elements in the list to occupy *non-contiguous* memory
  - Order the nodes by associating each with its neighbour(s)

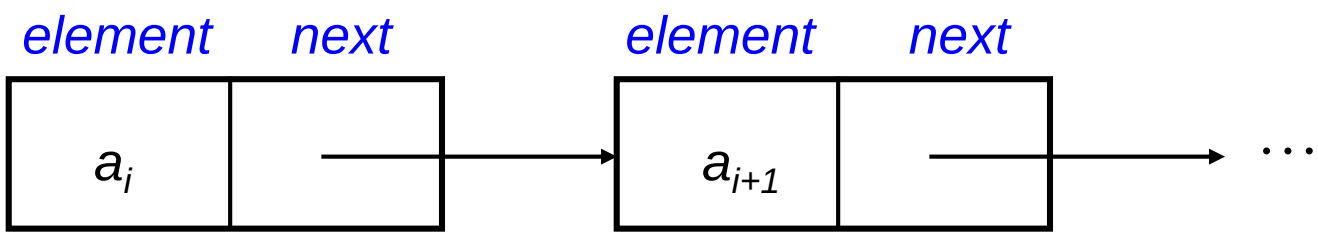

This is one node of the collection…

… and this one comes after it in the collection (most likely not occupying contiguous memory that is next to the previous node).

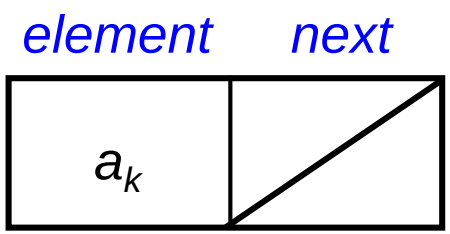

Next pointer of this node is "null", i.e. it has no next neighbour.

3.2 Linked List Approach (2/4)

- Recap: Object References (1/2)
  - Note the difference between primitive data types and reference data types

```
int x = 20;
```

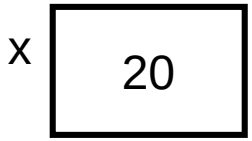


```
Integer y = new Integer(20);
```

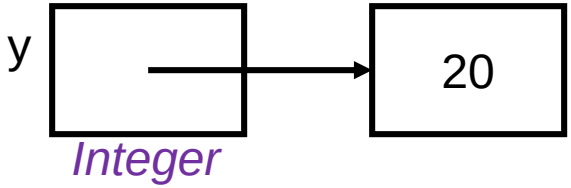


```
String z = new String("hi th");
```

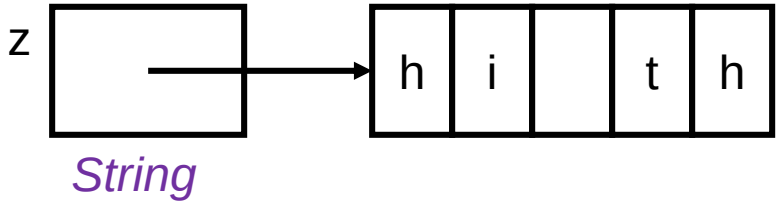

3.2 Linked List Approach (2/4)

- Recap: Object References (1/2)
  - Note the difference between primitive data types and reference data types

```
int x = 20;
```

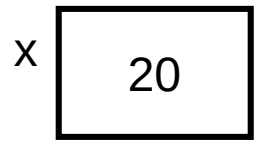


```
Integer y = new Integer(20);
```

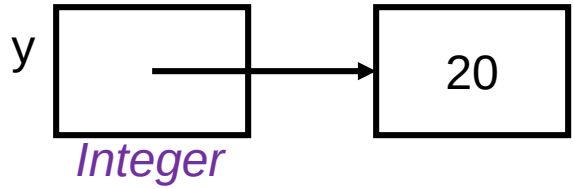


```
String z = new String("hi th");
```

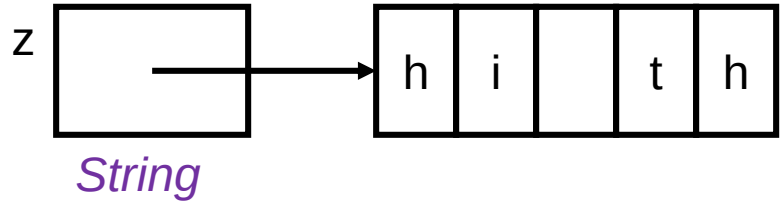

- An instance (object) of a class only comes into existence (constructed) when the new operator is applied
- A reference variable only contains a reference or pointer to an object.

3.2 Linked List Approach (3/4)

- Recap: Object References (2/2)
  - Look at it in more details:

3.2 Linked List Approach (3/4)

- Recap: Object References (2/2)
  - Look at it in more details:

```
Integer y
```

3.2 Linked List Approach (3/4)

- Recap: Object References (2/2)
  - Look at it in more details:

```
Integer y   new Integer(20);
```

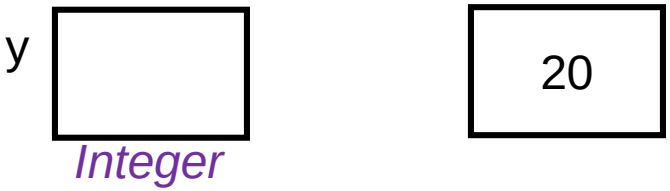

3.2 Linked List Approach (3/4)

- Recap: Object References (2/2)
  - Look at it in more details:

```
Integer y = new Integer(20);
```

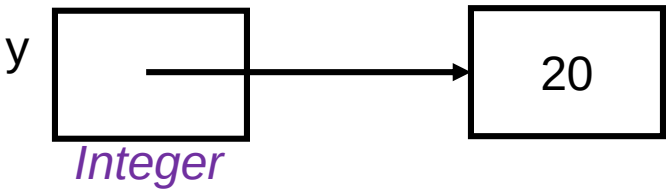

3.2 Linked List Approach (3/4)

- Recap: Object References (2/2)
  - Look at it in more details:

```
Integer y = new Integer(20);

Integer w;
```

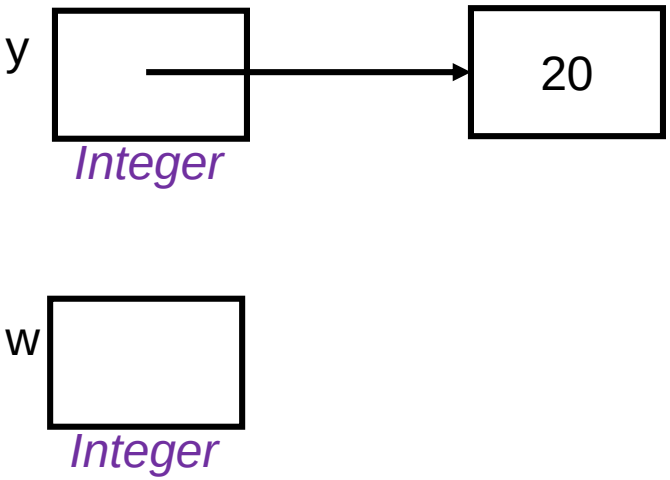

3.2 Linked List Approach (3/4)

- Recap: Object References (2/2)
  - Look at it in more details:

```
Integer y = new Integer(20);

Integer w;
w = new Integer(20);
if (w == y)
  System.out.println("1. w == y");

w = y;
if (w == y)
     System.out.println("2. w == y");
```

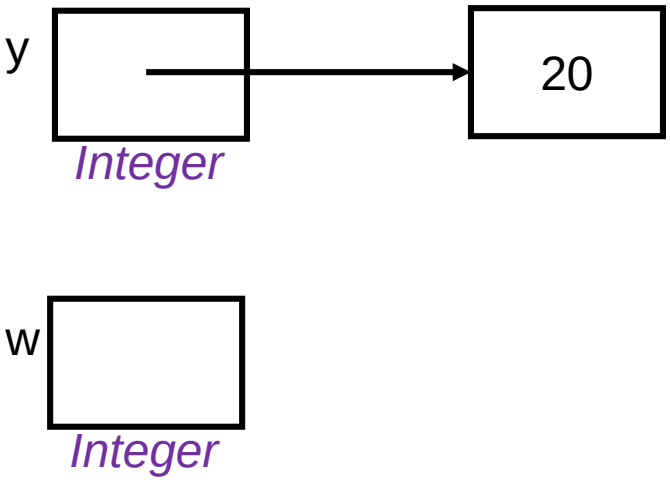

- Output:

3.2 Linked List Approach (4/4)

- Quiz: Which is the right representation of e?

```
class Employee {
    private String name;
    private int salary;
    // etc.
}
```

```
Employee e = new Employee("Alan", 2000);
```

(A)

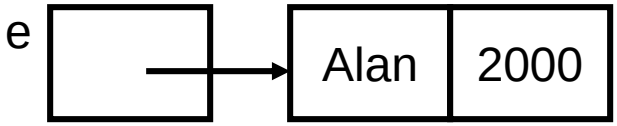

(B)

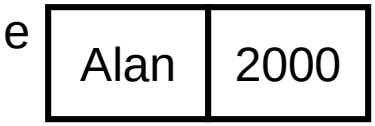

(C)

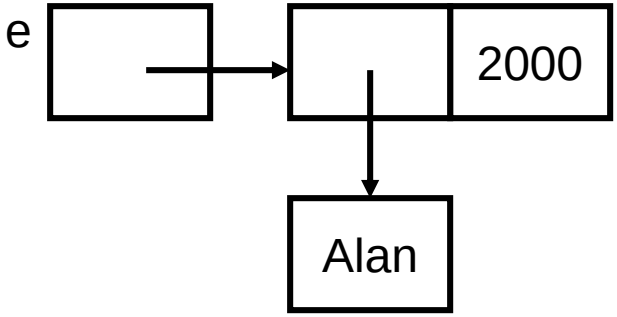

(D)

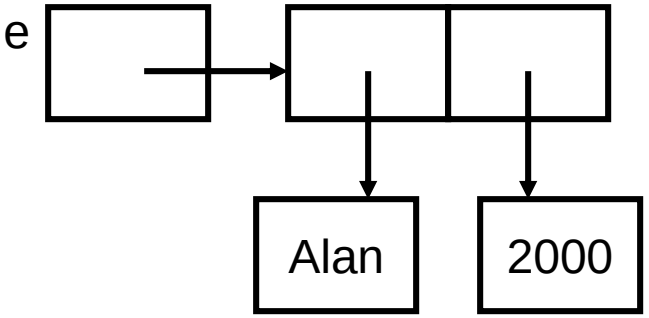

3.3 ListNode (using generic)

ListNode.java

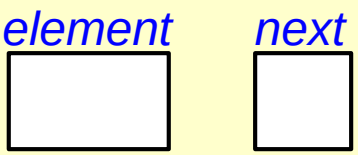


```java
class ListNode <E> {
  /* data attributes */
  private E element;
  private ListNode <E> next;

  /* constructors */
  public ListNode(E item) { this(item, null); }

  public ListNode(E item, ListNode <E> n) {
    element = item;
    next = n;
  }

  /* get the next ListNode */
  public ListNode <E> getNext() { return next; }

  /* get the element of the ListNode */
  public E getElement() { return element; }

  /* set the next reference */
  public void setNext(ListNode <E> n) { next = n };
}
```

3.4 Forming a Linked List (1/3)

- For a sequence of 4 items $< a_0, a_1, a_2, a_3 >$

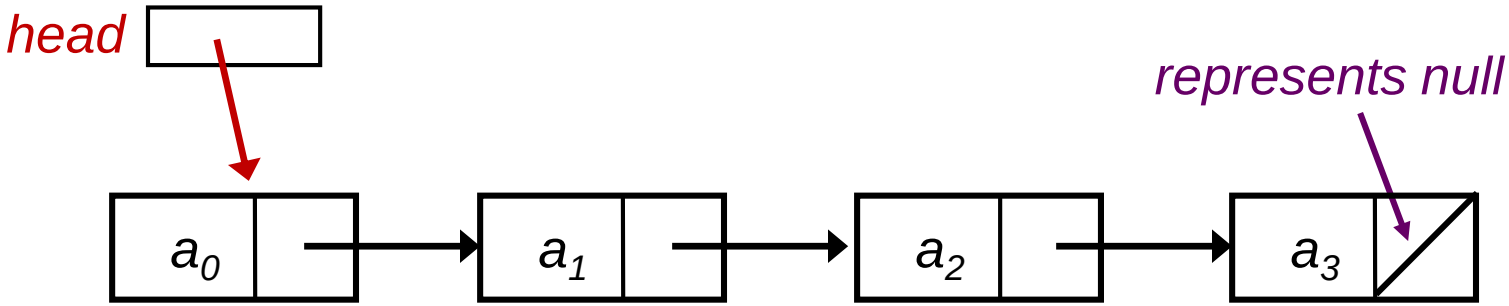

We need a *head* to indicate where the first node is.
From the *head* we can get to the rest.

3.4 Forming a Linked List (2/3)

- For a sequence of 4 items $< a_0, a_1, a_2, a_3 >$

3.4 Forming a Linked List (2/3)

- For a sequence of 4 items < a_0, a_1, a_2, a_3 >

```
ListNode <String> node3 = new ListNode <String>("a3", null);
```

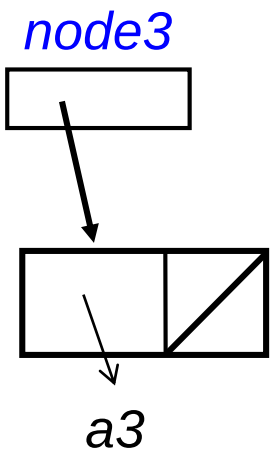

3.4 Forming a Linked List (2/3)

- For a sequence of 4 items < a_0, a_1, a_2, a_3 >

```
ListNode <String> node3 = new ListNode <String>("a3", null);
ListNode <String> node2 = new ListNode <String>("a2", node3);
```

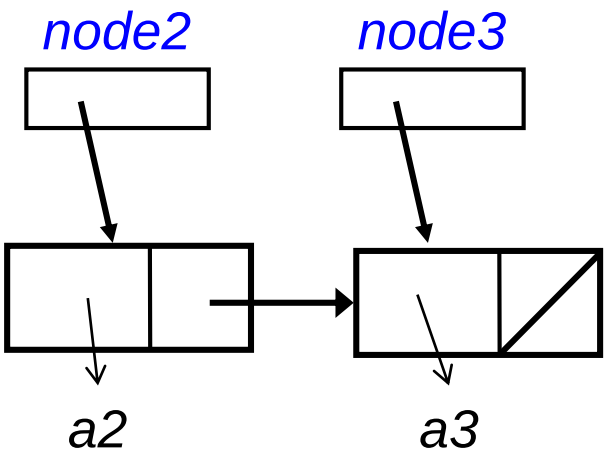

3.4 Forming a Linked List (2/3)

- For a sequence of 4 items < a_0, a_1, a_2, a_3 >

```
ListNode <String> node3 = new ListNode <String>("a3", null);
ListNode <String> node2 = new ListNode <String>("a2", node3);
ListNode <String> node1 = new ListNode <String>("a1", node2);
```

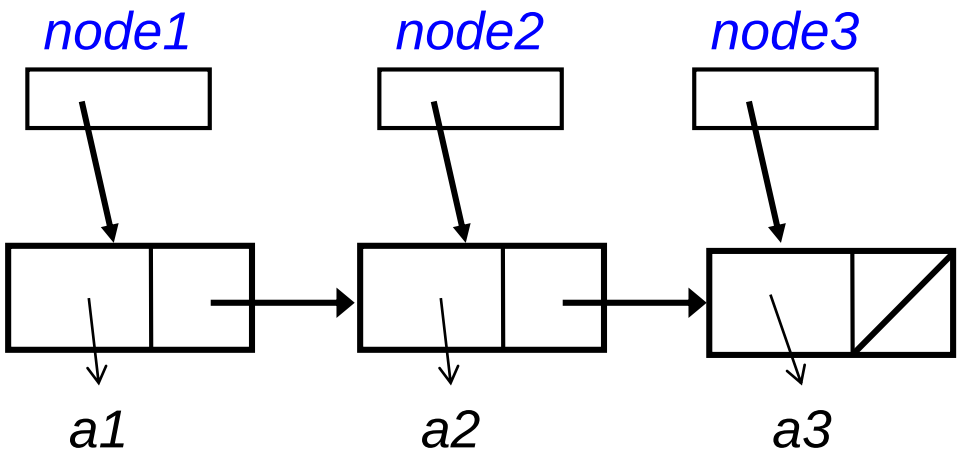

3.4 Forming a Linked List (2/3)

- For a sequence of 4 items < a_0, a_1, a_2, a_3 >

```
ListNode <String> node3 = new ListNode <String>("a3", null);
ListNode <String> node2 = new ListNode <String>("a2", node3);
ListNode <String> node1 = new ListNode <String>("a1", node2);
ListNode <String> head  = new ListNode <String>("a0", node1);
```

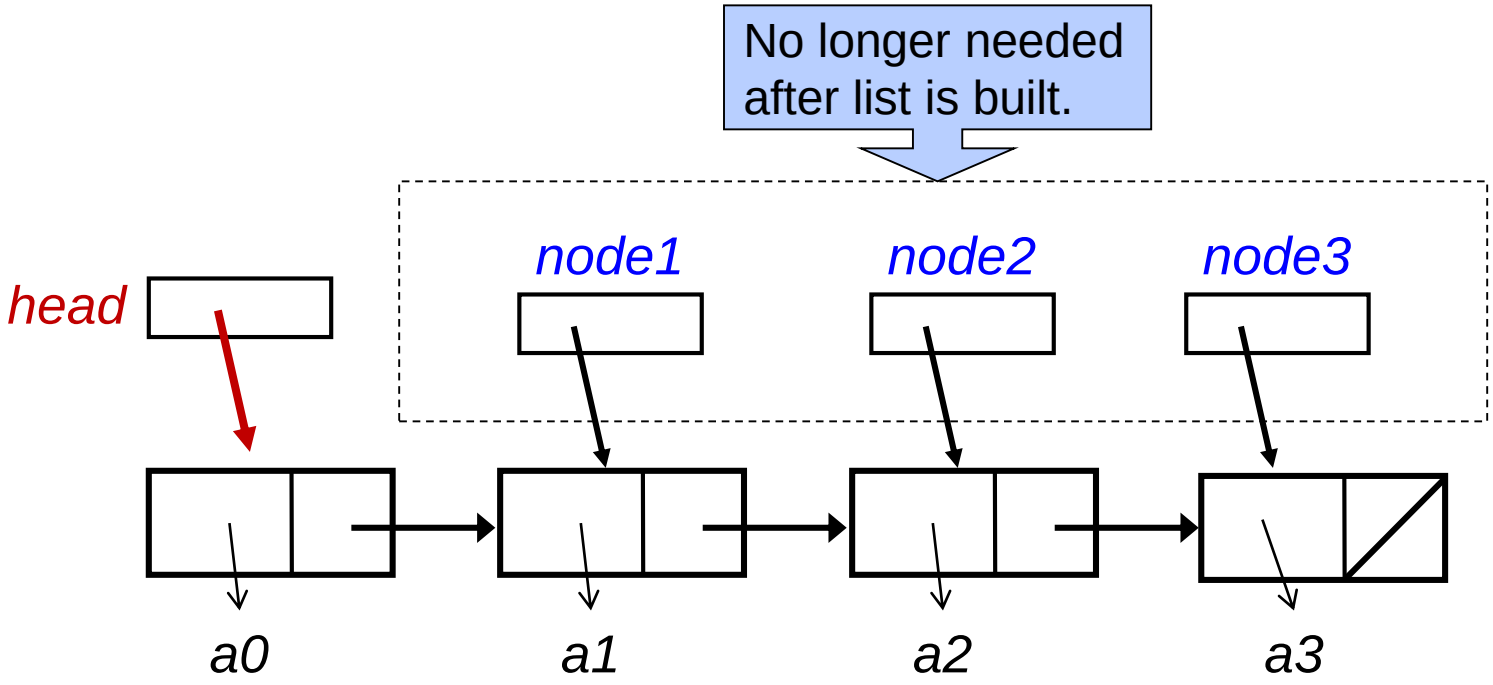

3.5 Basic Linked List (1/5)

- Using ListNode to define BasicLinkedList

BasicLinkedList.java

```
import java.util.*;
class BasicLinkedList <E> implements ListInterface <E> {
  private ListNode <E> head = null;
  private int num_nodes = 0;

  public boolean isEmpty() { return (num_nodes == 0); }

  public int size() { return num_nodes; }

  public E getFirst() throws EmptyListException {
    if (head == null)
      throw new EmptyListException("can't get from an empty list");
    else return head.getElement();
  }

  public boolean contains(E item) {
    for (ListNode <E> n = head; n != null; n = n.getNext())
      if (n.getElement().equals(item)) return true;
    return false;
  }
```

3.5 Basic Linked List (2/5)

- The adding and removal of first element

BasicLinkedList.java

```
public void addFirst(E item) {
   head = new ListNode <E> (item, head);
   num_nodes++;
}

public E removeFirst() throws EmptyListException {
   ListNode <E> ln;
   if (head == null)
     throw new EmptyListException("can't remove from empty list");
   else {
     ln = head;
     head = head.getNext();
     num_nodes--;
     return ln.getElement();
   }
}
```

3.5 Basic Linked List (3/5)

```
public void addFirst(E item) {
   head = new ListNode <E> (item, head);
   num_nodes++;
}
```

- The addFirst() method

Case	Before: list	After: list.addFirst(99)
0 item	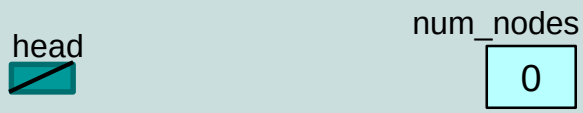	
1 item	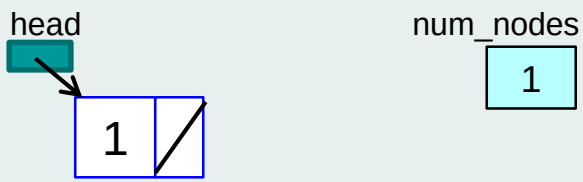	
2 or more items	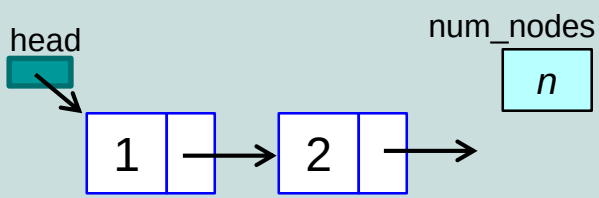	

3.5 Basic Linked List (3/5)

```
public void addFirst(E item) {
   head = new ListNode <E> (item, head);
   num_nodes++;
}
```

- The addFirst() method

Case	Before: list	After: list.addFirst(99)
0 item	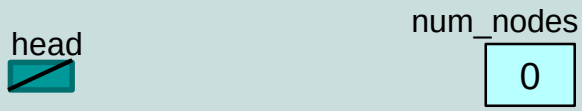	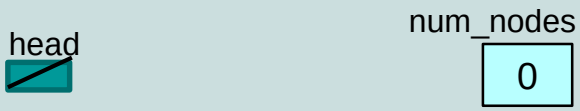
1 item		
2 or more items	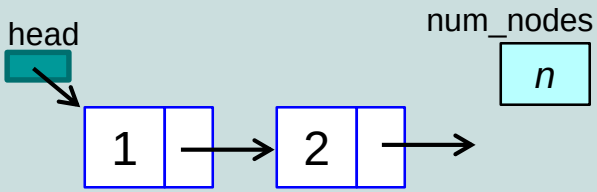	

3.5 Basic Linked List (3/5)

```
public void addFirst(E item) {
   head = new ListNode <E> (item, head);
   num_nodes++;
}
```

- The addFirst() method

Case	Before: list	After: list.addFirst(99)
0 item	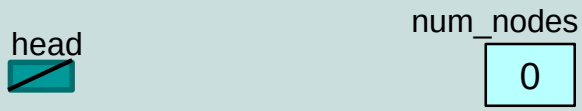	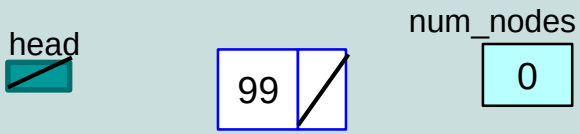
1 item		
2 or more items	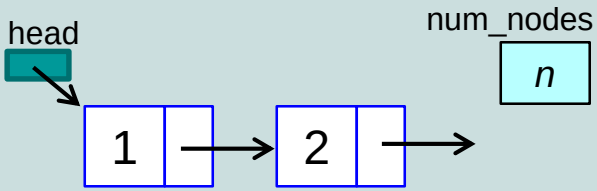	

3.5 Basic Linked List (3/5)

```
public void addFirst(E item) {
   head = new ListNode <E> (item, head);
   num_nodes++;
}
```

- The addFirst() method

Case	Before: list	After: list.addFirst(99)
0 item	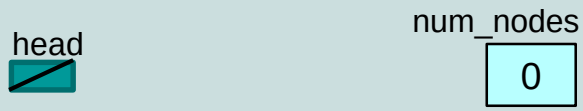	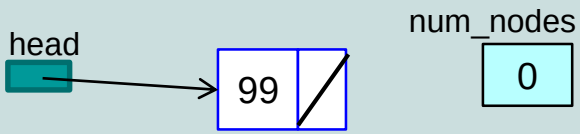
1 item		
2 or more items	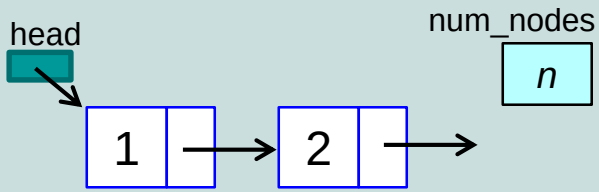	

3.5 Basic Linked List (3/5)

```
public void addFirst(E item) {
   head = new ListNode <E> (item, head);
   num_nodes++;
}
```

- The addFirst() method

Case	Before: list	After: list.addFirst(99)
0 item	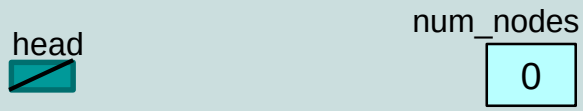	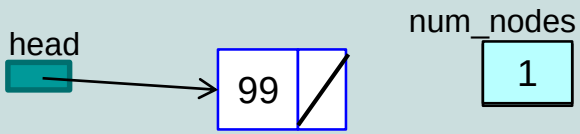
1 item		
2 or more items	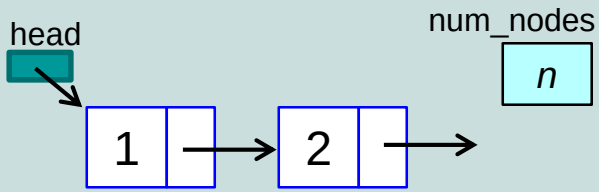	

3.5 Basic Linked List (4/5)

- The removeFirst() method

Case	Before: list	After: list.removeFirst()
0 item	head num_nodes 0	
1 item	head num_nodes 1 1	
2 or more items	head num_nodes *n* 1 → 2 →	

```
public E removeFirst() throws EmptyListException {
   ListNode <E> ln;
   if (head == null)
      throw new EmptyListException("can't remove");
   else {
      ln = head; head = head.getNext(); num_nodes--;
      return ln.getElement();
   }
}
```

3.5 Basic Linked List (4/5)

- The removeFirst() method

Case	Before: list	After: list.removeFirst()
0 item	head num_nodes 0	can't remove
1 item	head num_nodes 1 1	
2 or more items	head num_nodes *n* 1 → 2 →	

```
public E removeFirst() throws EmptyListException {
   ListNode <E> ln;
   if (head == null)
      throw new EmptyListException("can't remove");
   else {
      ln = head; head = head.getNext(); num_nodes--;
      return ln.getElement();
   }
}
```

3.5 Basic Linked List (4/5)

- The removeFirst() method

Case	Before: list	After: list.removeFirst()
0 item	head num_nodes: 0	can't remove
1 item	head → 1 / num_nodes: 1	head → 1 / num_nodes: 1
2 or more items	head → 1 → 2 → num_nodes: *n*	

```
public E removeFirst() throws EmptyListException {
   ListNode <E> ln;
   if (head == null)
      throw new EmptyListException("can't remove");
   else {
      ln = head; head = head.getNext(); num_nodes--;
      return ln.getElement();
   }
}
```

3.5 Basic Linked List (4/5)

- The removeFirst() method

Case	Before: list	After: list.removeFirst()
0 item	head num_nodes 0	can't remove
1 item	head 1 num_nodes 1	head ln 1 num_nodes 1
2 or more items	head 1 2 num_nodes *n*	

```
public E removeFirst() throws EmptyListException {
   ListNode <E> ln;
   if (head == null)
      throw new EmptyListException("can't remove");
   else {
      ln = head; head = head.getNext(); num_nodes--;
      return ln.getElement();
   }
}
```

3.5 Basic Linked List (4/5)

- The removeFirst() method

Case	Before: list	After: list.removeFirst()
0 item	head num_nodes 0	can't remove
1 item	head 1 num_nodes 1	head ln 1 num_nodes 1
2 or more items	head 1 2 num_nodes *n*	

```
public E removeFirst() throws EmptyListException {
   ListNode <E> ln;
   if (head == null)
      throw new EmptyListException("can't remove");
   else {
      ln = head; head = head.getNext(); num_nodes--;
      return ln.getElement();
   }
}
```

3.5 Basic Linked List (4/5)

- The removeFirst() method

Case	Before: list	After: list.removeFirst()
0 item	head num_nodes 0	can't remove
1 item	head 1 num_nodes 1	head ln 1 num_nodes 1
2 or more items	head 1 2 num_nodes *n*	

```
public E removeFirst() throws EmptyListException {
   ListNode <E> ln;
   if (head == null)
      throw new EmptyListException("can't remove");
   else {
      ln = head; head = head.getNext(); num_nodes--;
      return ln.getElement();
   }
}
```

3.5 Basic Linked List (4/5)

- The removeFirst() method

Case	Before: list	After: list.removeFirst()
0 item	head num_nodes 0	can't remove
1 item	head 1 num_nodes 1	head ln 1 num_nodes 0
2 or more items	head 1 2 num_nodes *n*	

```
public E removeFirst() throws EmptyListException {
   ListNode <E> ln;
   if (head == null)
      throw new EmptyListException("can't remove");
   else {
      ln = head; head = head.getNext(); num_nodes--;
      return ln.getElement();
   }
}
```

3.5 Basic Linked List (5/5)

- Printing of the linked list

BasicLinkedList.java

```
public void print() throws EmptyListException {
   if (head == null)
      throw new EmptyListException("Nothing to print...");

   ListNode <E> ln = head;
   System.out.print("List is: " + ln.getElement());
   for (int i=1; i < num_nodes; i++) {
      ln = ln.getNext();
      System.out.print(", " + ln.getElement());
   }
   System.out.println(".");
}
```

4 More Linked Lists

Exploring variants of linked list

4. Linked Lists: Variants

OVERVIEW!

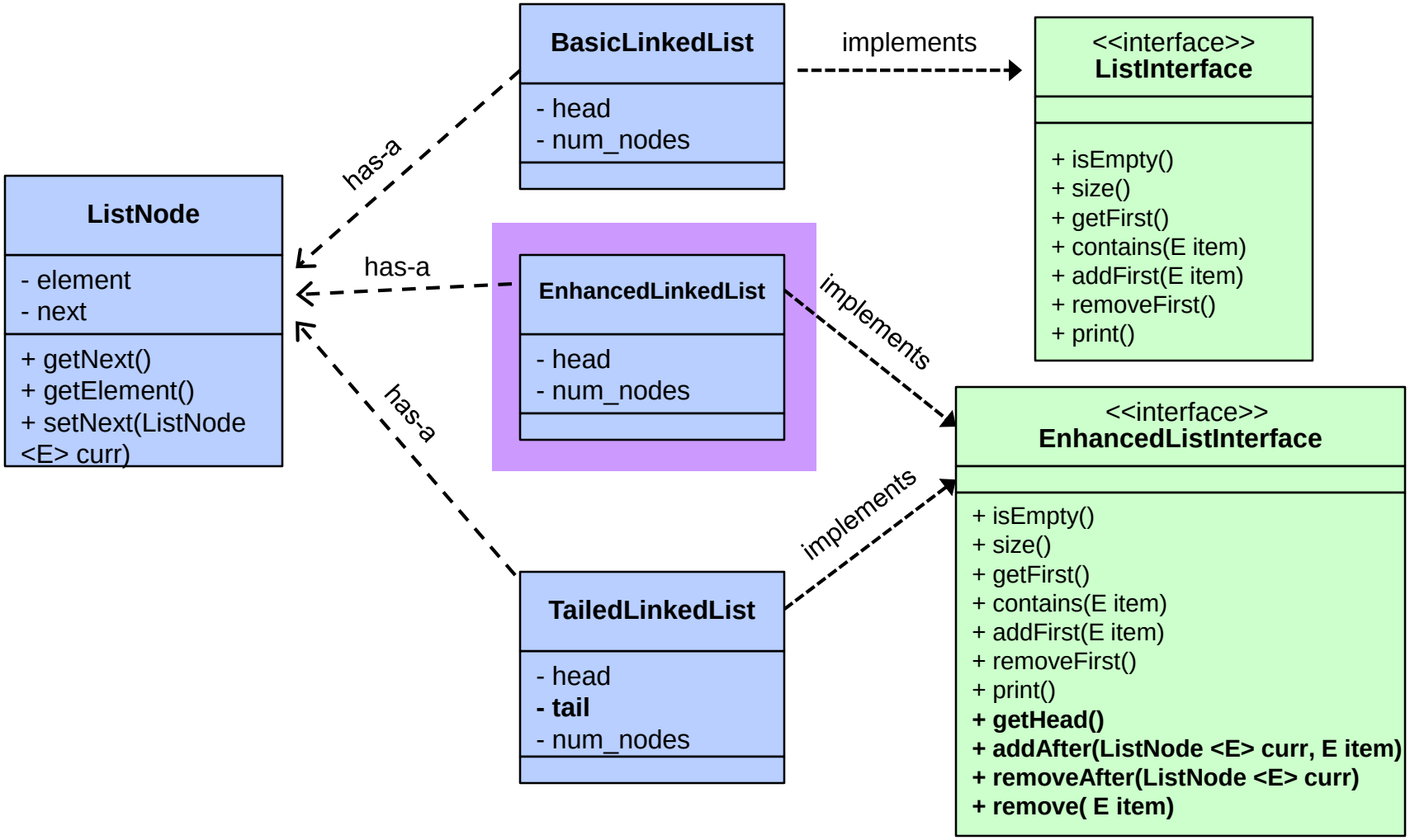

4.1 Enhanced Linked List (1/11)

- We explore different implementations of Linked List
  - Basic Linked List, Tailed Linked List, Circular Linked List, Doubly Linked List, etc.
- When nodes are to be inserted to the middle of the linked list, BasicLinkedList (BLL) is not good enough.
- For example, BLL offers only insertion at the front of the list. If the items in the list must always be sorted according to some key values, then we must be able to insert at the right place.
- We will enhance BLL to include some additional methods. We shall call this Enhanced Linked List (ELL).
  - (Note: We could have made ELL a subclass of BLL, but here we will create ELL from scratch instead.)

4.1 Enhanced Linked List (2/11)

- We use a new interface file:

EnhancedListInterface.java

```
import java.util.*;

public interface EnhancedListInterface <E> {

  public boolean isEmpty();
  public int     size();
  public E       getFirst() throws EmptyListException;
  public boolean contains(E item);
  public void    addFirst(E item);
  public E       removeFirst() throws EmptyListException;
  public void    print();

  public ListNode <E>   getHead();
  public void    addAfter(ListNode <E> current, E item);
  public E       removeAfter(ListNode <E> current)
                    throws EmptyListException;
  public E       remove(E item) throws EmptyListException;
}
```

New

4.1 Enhanced Linked List (3/11)

EnhancedLinkedList.java

```
import java.util.*;
class EnhancedLinkedList <E>
                implements EnhancedListInterface <E> {
  private ListNode <E> head = null;
  private int num_nodes = 0;

  public boolean isEmpty() { return (num_nodes == 0); }
  public int size() { return num_nodes; }
  public E getFirst() { ... }
  public boolean contains(E item) { ... }
  public void addFirst(E item) { ... }
  public E removeFirst() throws EmptyListException { ... };
  public void print() throws EmptyListException { ... };

  public ListNode <E> getHead() { return head; }

  public void addAfter(ListNode <E> current, E item) {
    if (current != null)
      current.setNext(new ListNode <E> (item, current.getNext()));
    else // insert item at front
      head = new ListNode <E> (item, head);
    num_nodes++;
  }
```

Same as in BasicLinkedList.java

To continue on next slide

4.1 Enhanced Linked List (4/11)

```
public void addAfter(ListNode <E> current, E item) {
```

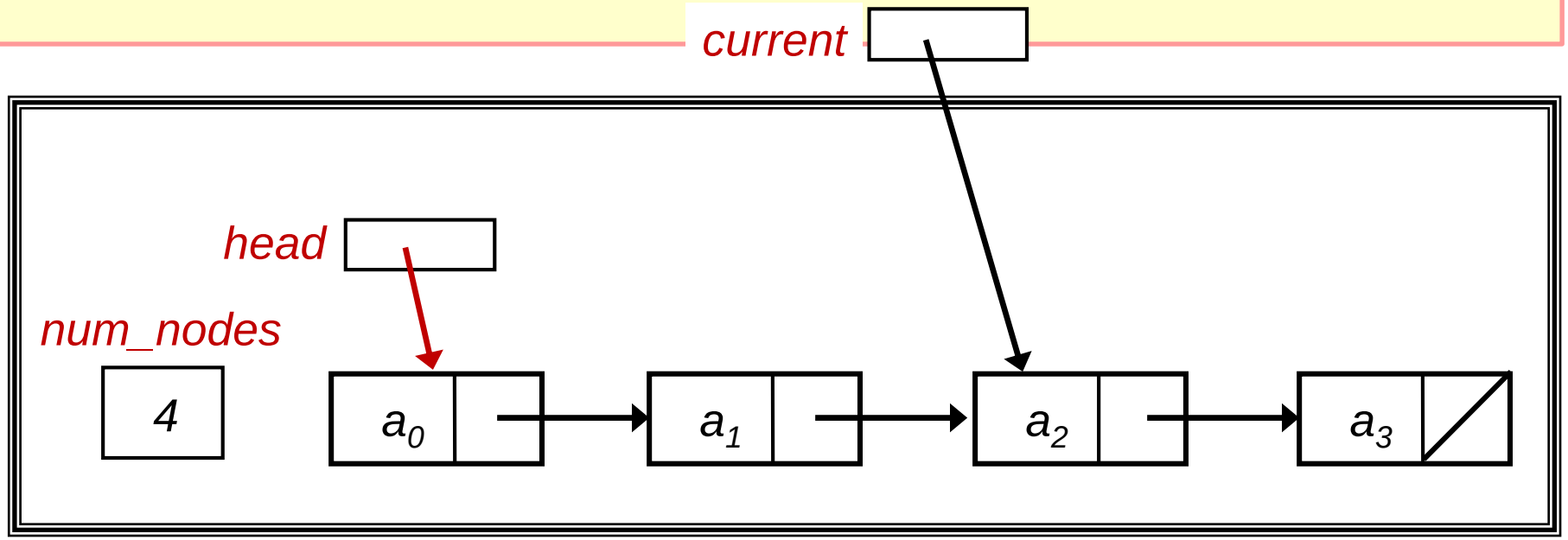

4.1 Enhanced Linked List (4/11)

```
public void addAfter(ListNode <E> current, E item) {
  if (current != null) {
    current.setNext(new ListNode <E>(item,current.getNext()));
```

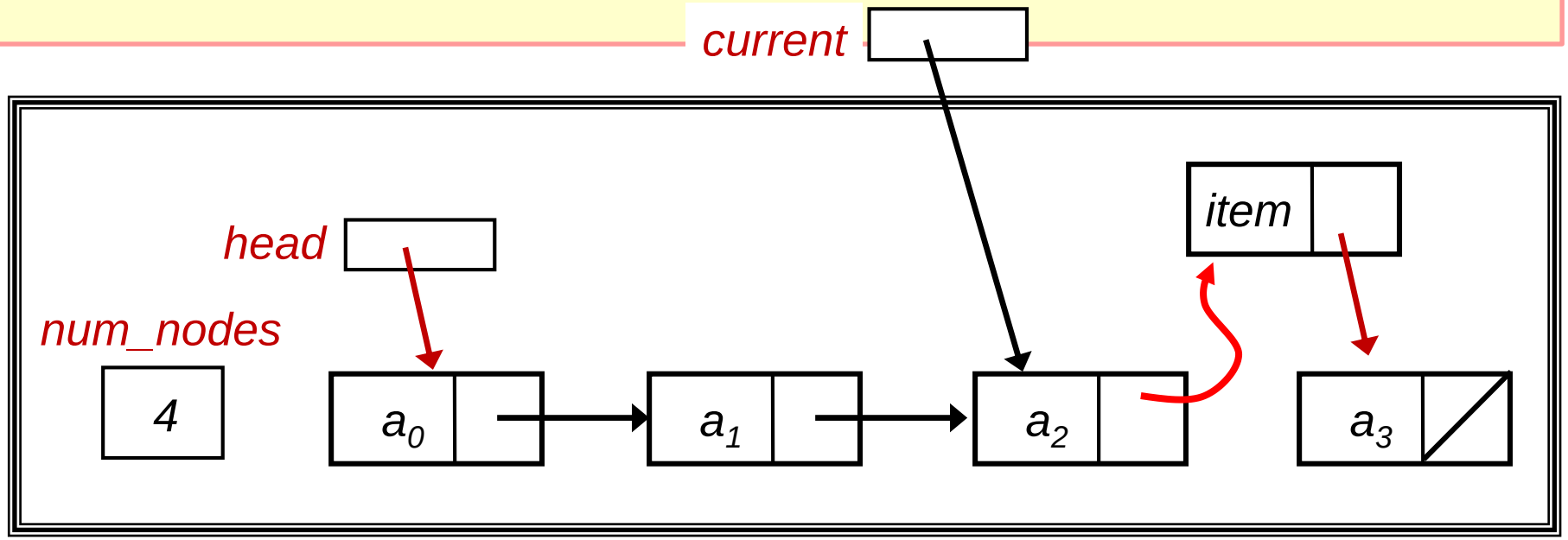

4.1 Enhanced Linked List (4/11)

```
public void addAfter(ListNode <E> current, E item) {
  if (current != null) {
    current.setNext(new ListNode <E>(item,current.getNext()));
  } else { // insert item at front
    head = new ListNode <E> (item, head);
  }
```

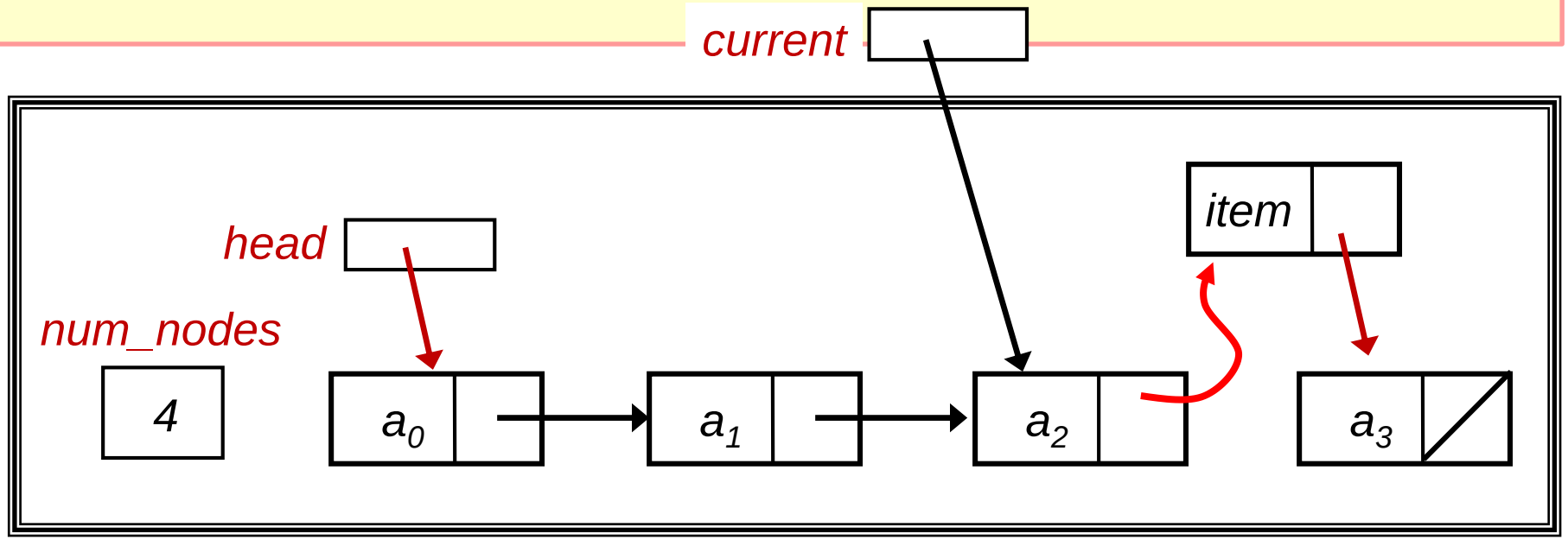

4.1 Enhanced Linked List (4/11)

```
public void addAfter(ListNode <E> current, E item) {
  if (current != null) {
    current.setNext(new ListNode <E>(item,current.getNext()));
  } else { // insert item at front
    head = new ListNode <E> (item, head);
  }
  num_nodes++;
}
```

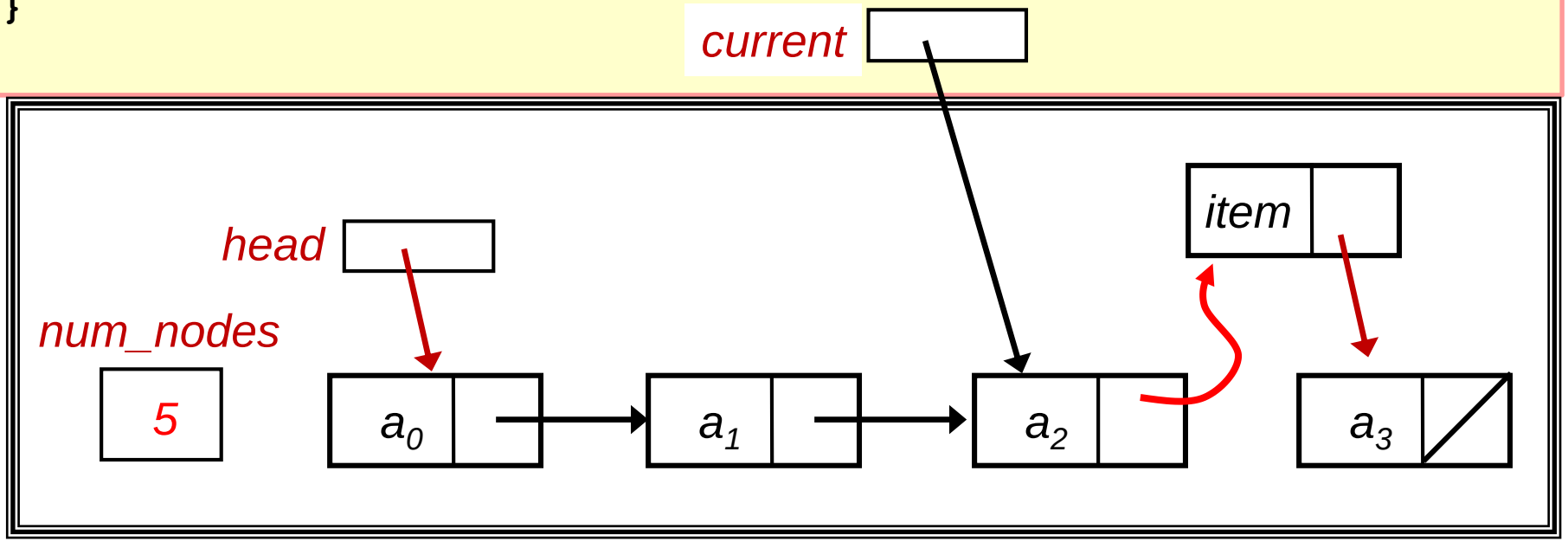

4.1 Enhanced Linked List (5/11)

EnhancedLinkedList.java

```
public E removeAfter(ListNode <E> current)
                    throws EmptyListException {
  E temp;
  if (current != null) {
    ListNode <E> nextPtr = current.getNext();
    if (nextPtr != null) {
      temp = nextPtr.getElement();
      current.setNext(nextPtr.getNext());
      num_nodes--;
      return temp;
    } else throw new EmptyListException("No next node to remove");
  } else { // if current is null, assume we want to remove head
    if (head != null) {
      temp = head.getElement();
      head = head.getNext();
      num_nodes--;
      return temp;
    } else throw new EmptyListException("No next node to remove");
  }
}
```

4.1 Enhanced Linked List (6/11)

```
public E removeAfter(ListNode <E> current) throws ... {
   E temp;
   if (current != null) {
```

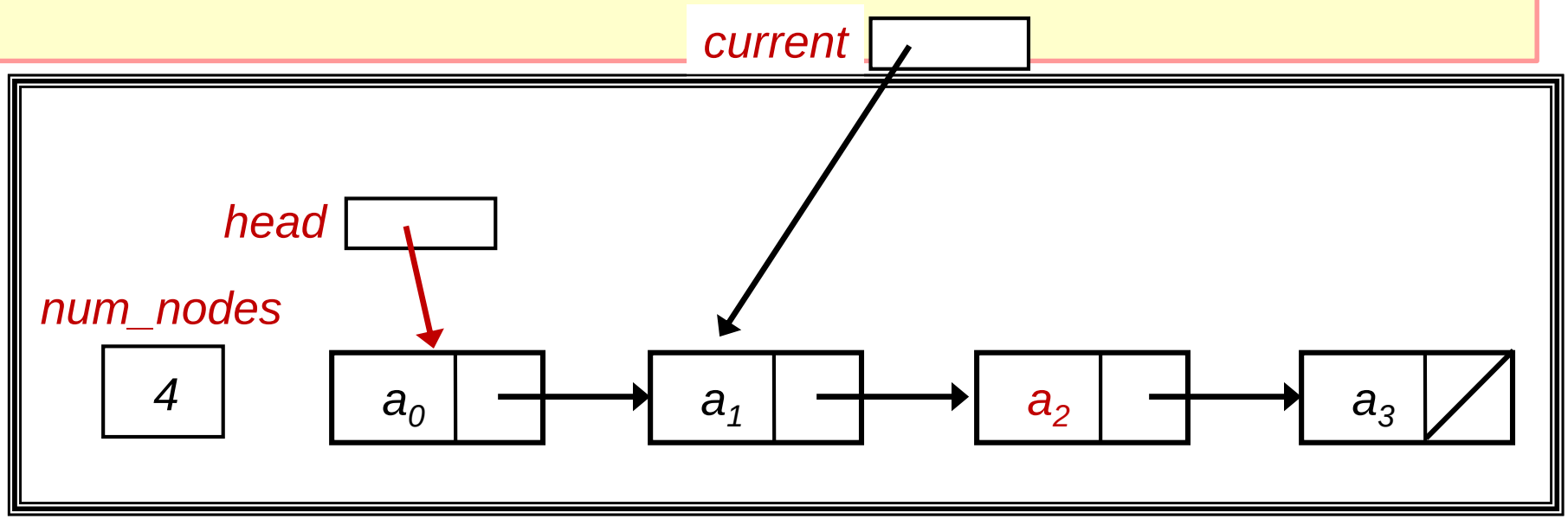

4.1 Enhanced Linked List (6/11)

```
public E removeAfter(ListNode <E> current) throws ... {
   E temp;
   if (current != null) {
      ListNode<E> nextPtr = current.getNext();
```

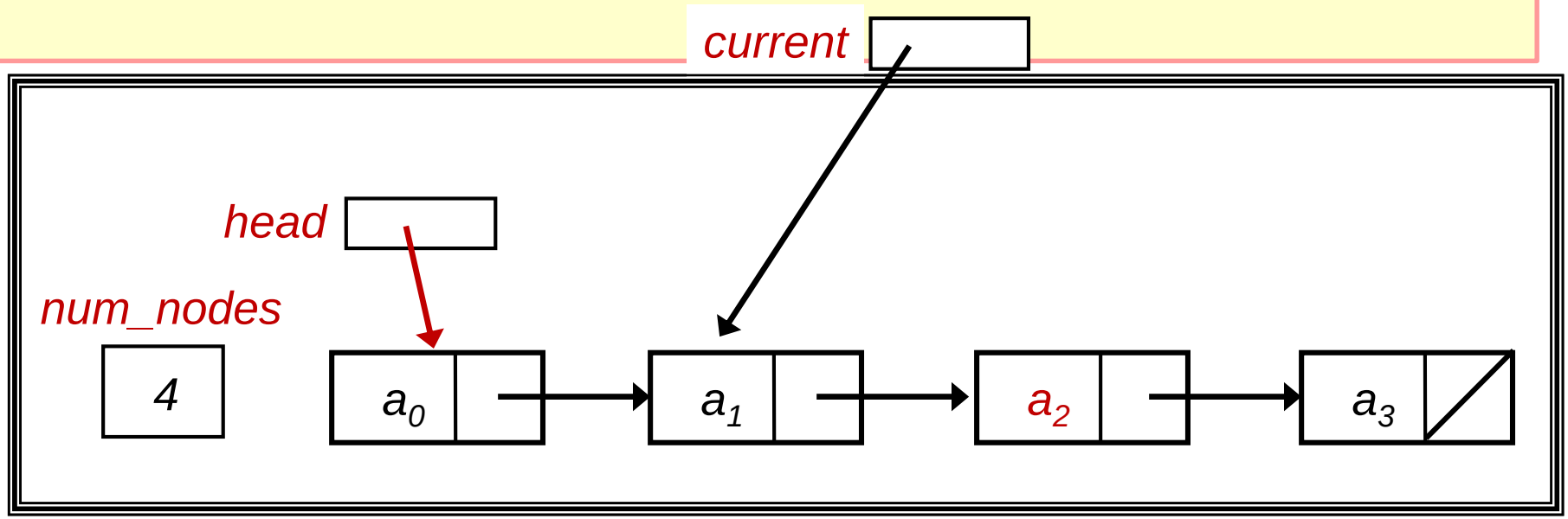

4.1 Enhanced Linked List (6/11)

```
public E removeAfter(ListNode <E> current) throws ... {
   E temp;
   if (current != null) {
      ListNode<E> nextPtr = current.getNext();
```

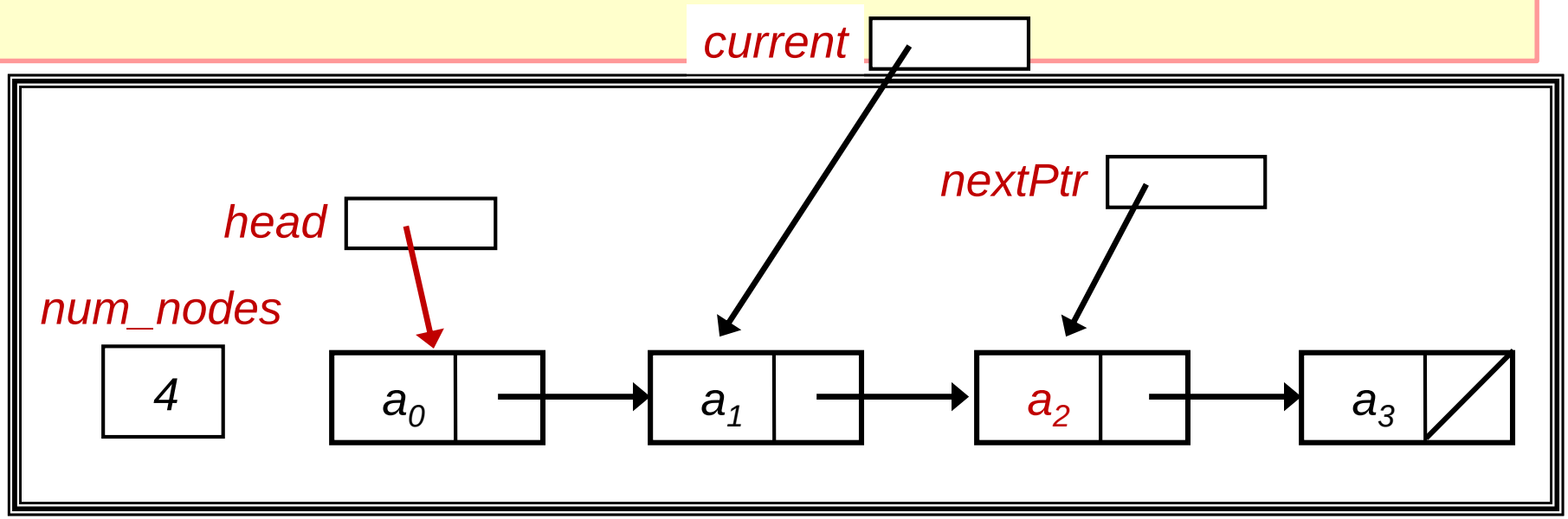

4.1 Enhanced Linked List (6/11)

```
public E removeAfter(ListNode <E> current) throws ... {
   E temp;
   if (current != null) {
      ListNode<E> nextPtr = current.getNext();
      if (nextPtr != null) {
```

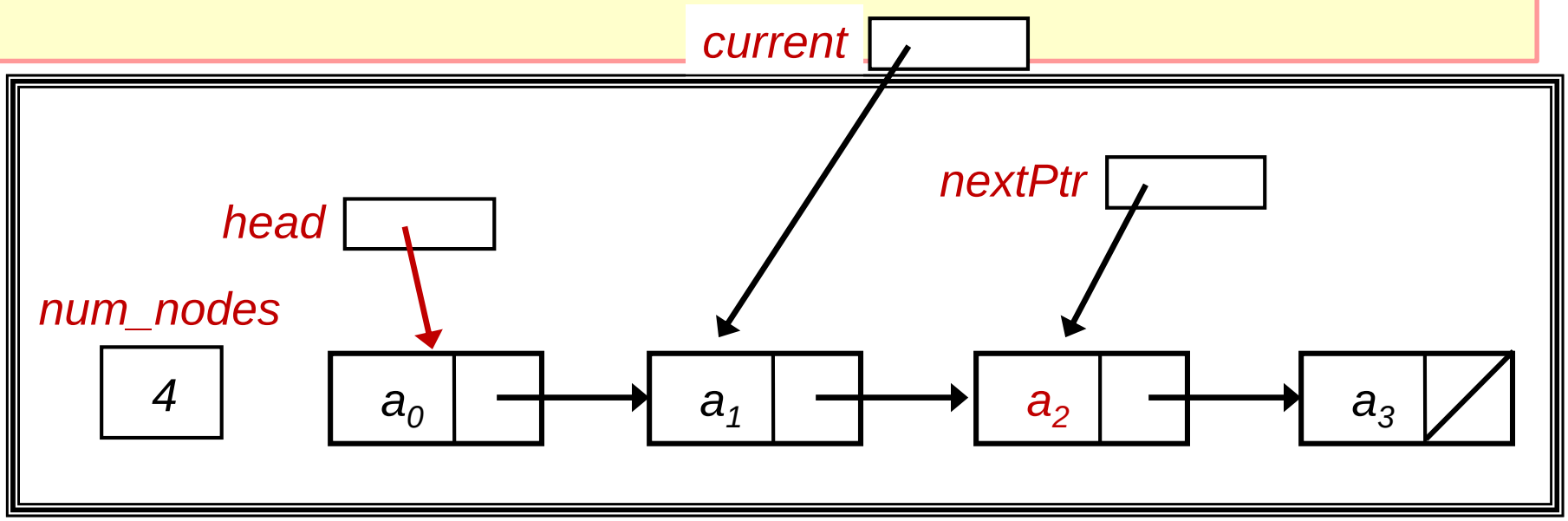

4.1 Enhanced Linked List (6/11)

```
public E removeAfter(ListNode <E> current) throws ... {
   E temp;
   if (current != null) {
      ListNode<E> nextPtr = current.getNext();
      if (nextPtr != null) {
         temp = nextPtr.getElement();
```

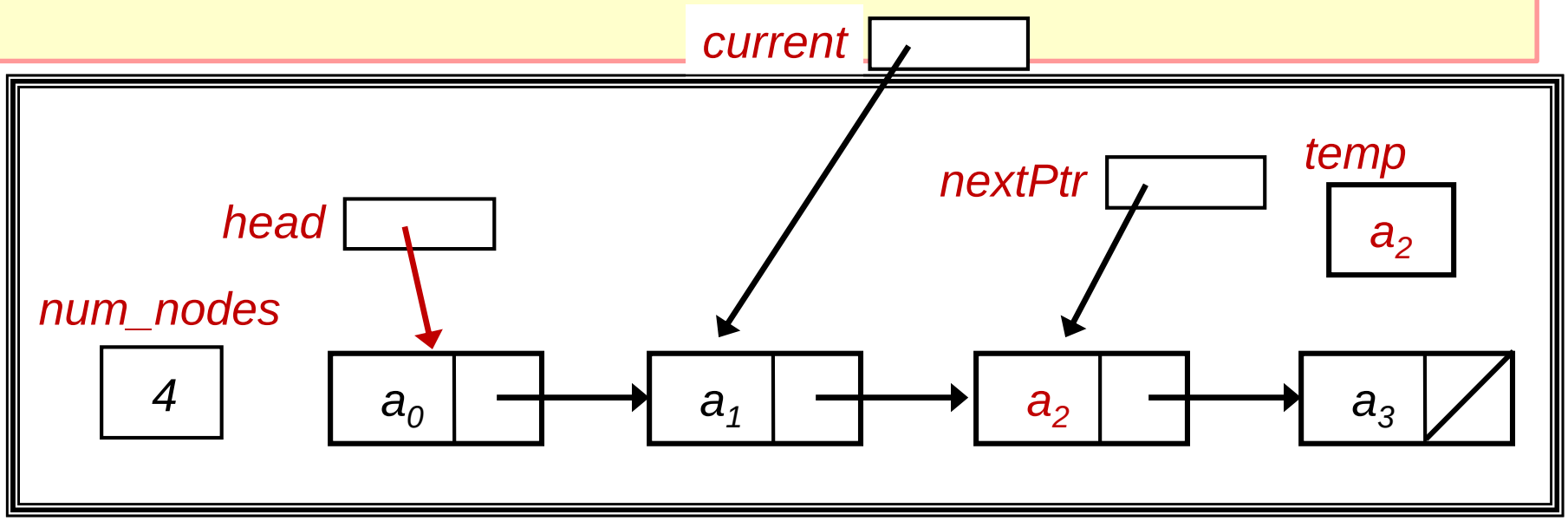

4.1 Enhanced Linked List (6/11)

```
public E removeAfter(ListNode <E> current) throws ... {
   E temp;
   if (current != null) {
      ListNode<E> nextPtr = current.getNext();
      if (nextPtr != null) {
         temp = nextPtr.getElement();
         current.setNext(nextPtr.getNext());
```

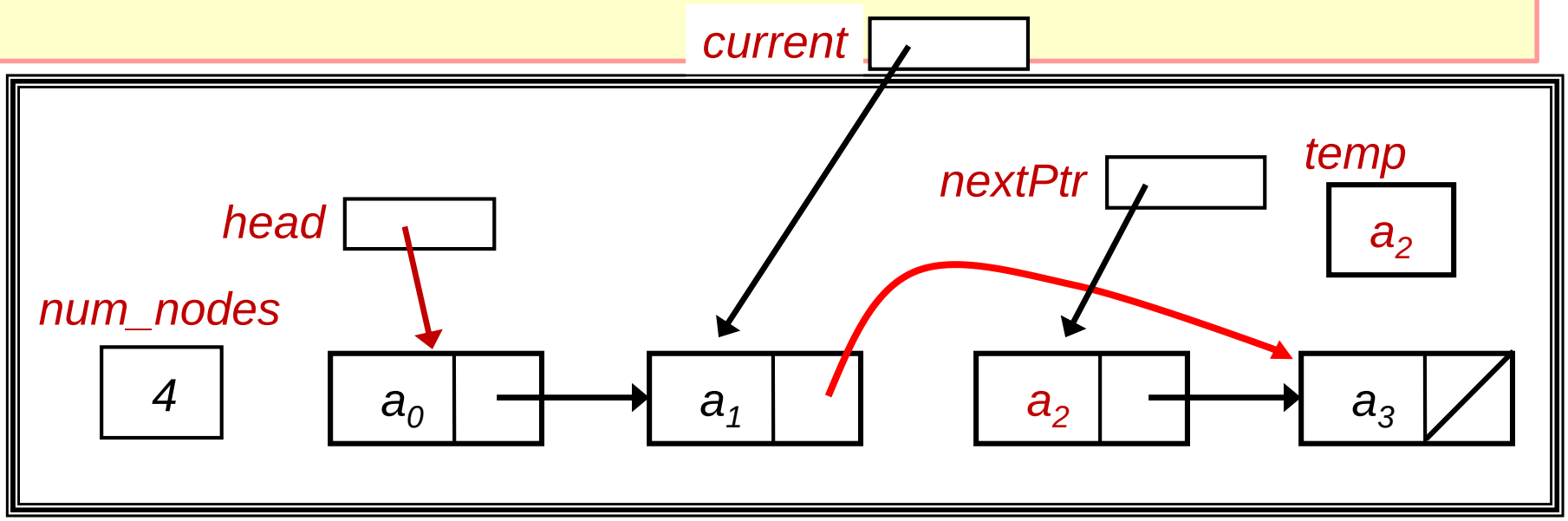

4.1 Enhanced Linked List (6/11)

```
public E removeAfter(ListNode <E> current) throws ... {
   E temp;
   if (current != null) {
      ListNode<E> nextPtr = current.getNext();
      if (nextPtr != null) {
         temp = nextPtr.getElement();
         current.setNext(nextPtr.getNext());
         num_nodes--;
```

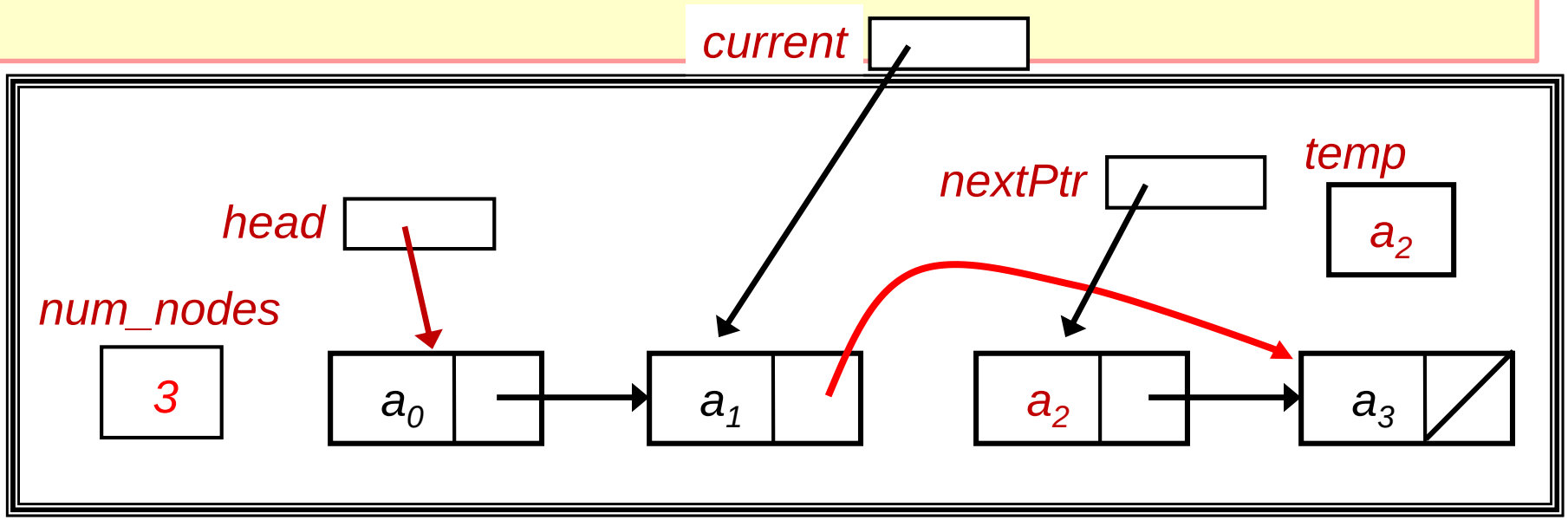

4.1 Enhanced Linked List (6/11)

```
public E removeAfter(ListNode <E> current) throws ... {
   E temp;
   if (current != null) {
      ListNode<E> nextPtr = current.getNext();
      if (nextPtr != null) {
         temp = nextPtr.getElement();
         current.setNext(nextPtr.getNext());
         num_nodes--;
         return temp;
      } else throw new EmptyListException("...");
   } else { ... }
}
```

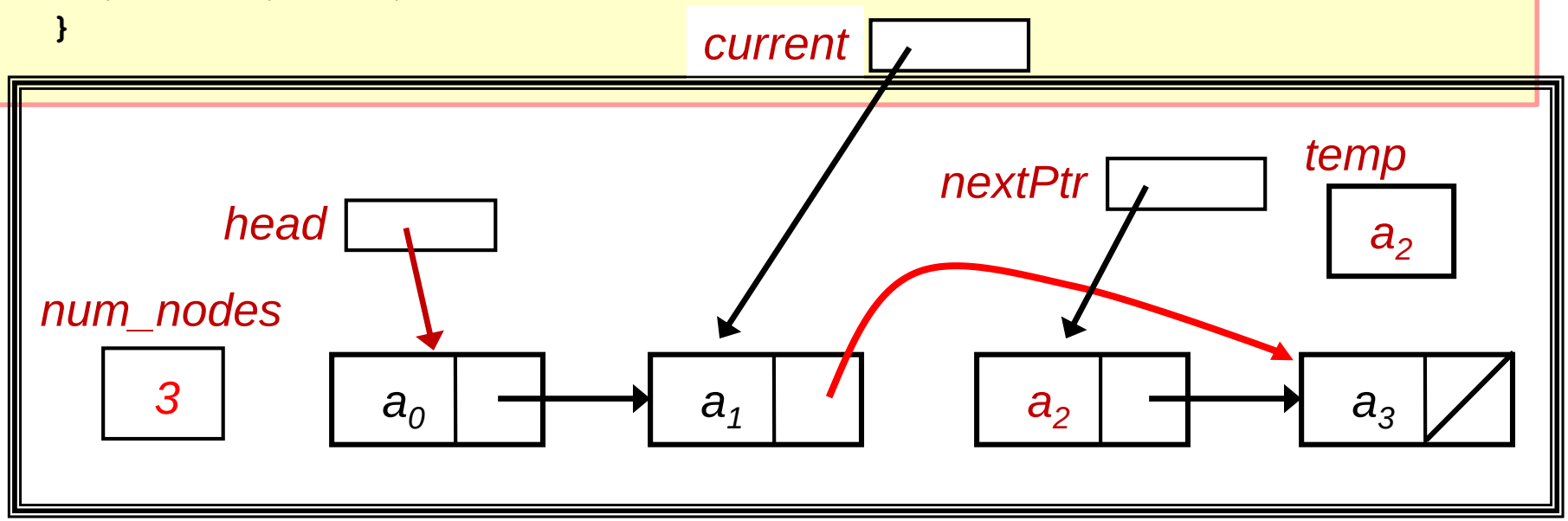

4.1 Enhanced Linked List (7/11)

```
public E removeAfter(ListNode <E> current) throws ... {
   E temp;
   if (current != null) {
      ...
   } else { // if current is null, we want to remove head
      if (head != null) {
```

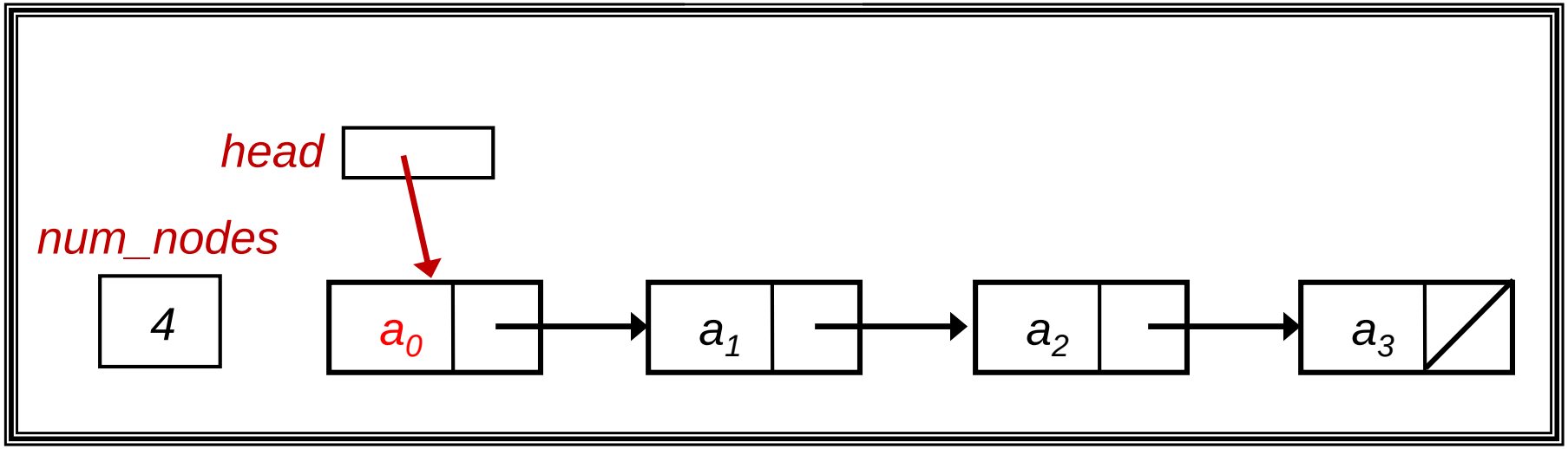

4.1 Enhanced Linked List (7/11)

```
public E removeAfter(ListNode <E> current) throws ... {
   E temp;
   if (current != null) {
      ...
   } else { // if current is null, we want to remove head
      if (head != null) {
         temp = head.getElement();
```

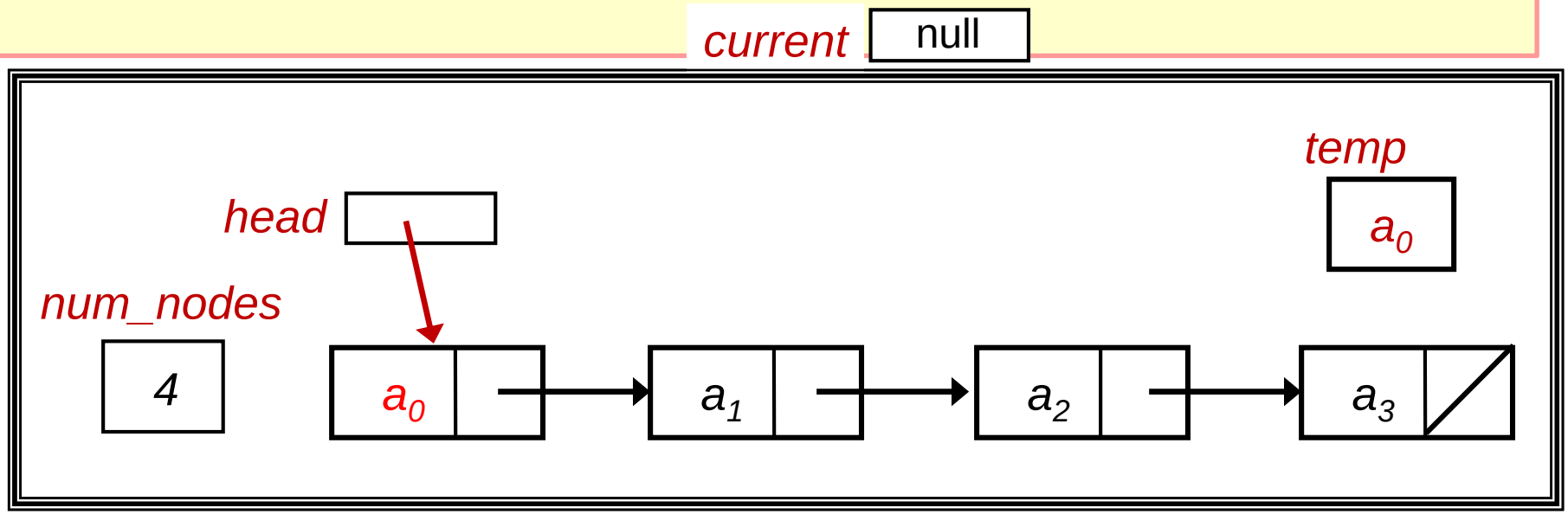

4.1 Enhanced Linked List (7/11)

```
public E removeAfter(ListNode <E> current) throws ... {
   E temp;
   if (current != null) {
      ...
   } else { // if current is null, we want to remove head
      if (head != null) {
         temp = head.getElement();
         head = head.getNext();
```

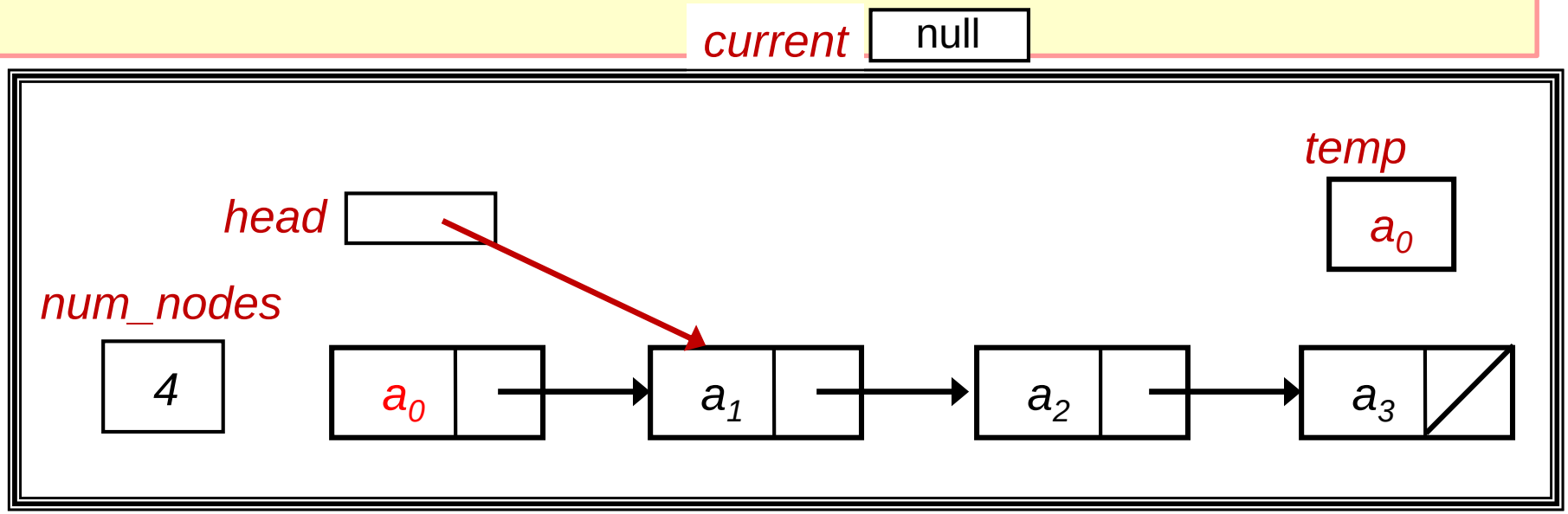

4.1 Enhanced Linked List (7/11)

```
public E removeAfter(ListNode <E> current) throws ... {
   E temp;
   if (current != null) {
      ...
   } else { // if current is null, we want to remove head
      if (head != null) {
         temp = head.getElement();
         head = head.getNext();
         num_nodes--;
```

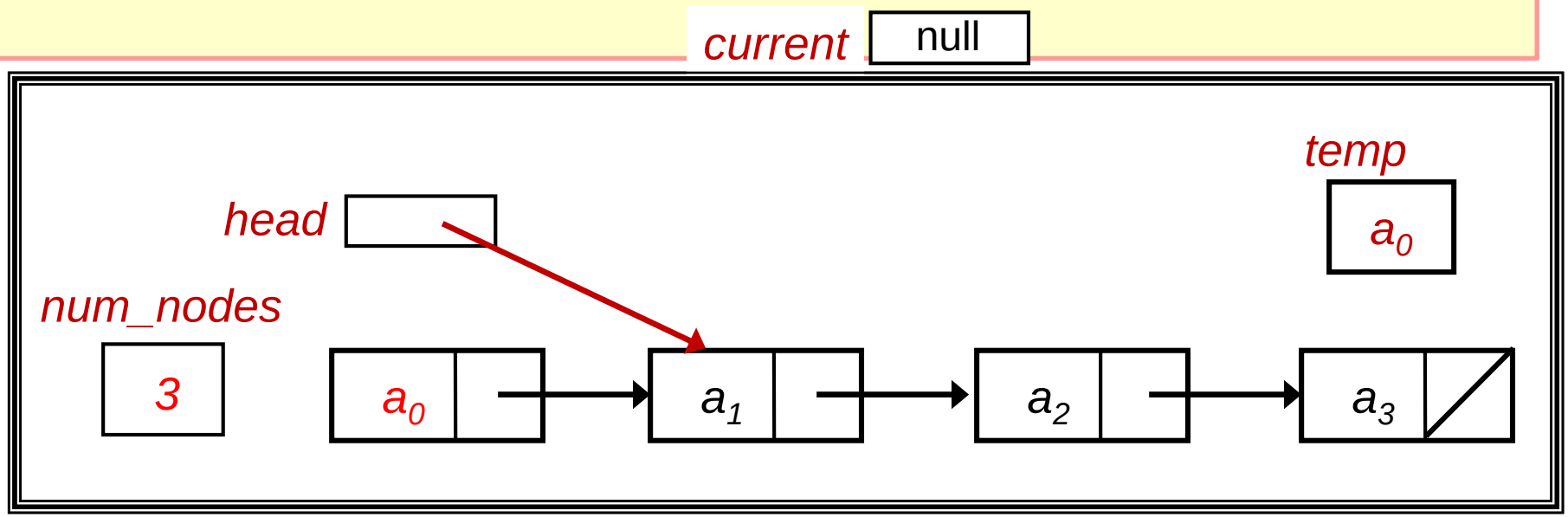

4.1 Enhanced Linked List (7/11)

```
public E removeAfter(ListNode <E> current) throws ... {
   E temp;
   if (current != null) {
      ...
   } else { // if current is null, we want to remove head
      if (head != null) {
         temp = head.getElement();
         head = head.getNext();
         num_nodes--;
         return temp;
   } else throw new EmptyListException("...");
}
```

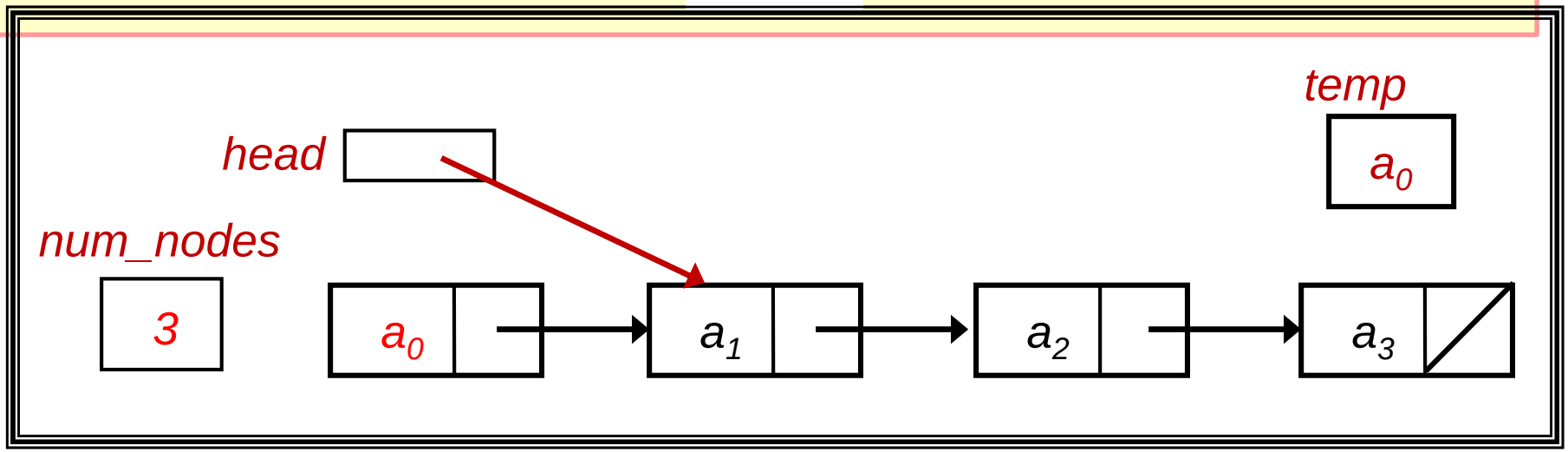

4.1 Enhanced Linked List (8/11)

- remove(E item)
  - Search for item in list
  - Re-using removeAfter() method

EnhancedLinkedList.java

```
public E remove(E item)
                    throws EmptyListException {
  // Write your code below...
  // Should make use of removeAfter() method.



  }
}
```

4.1 Enhanced Linked List (9/11)

```
public E remove(E item) throws ... {



}
```

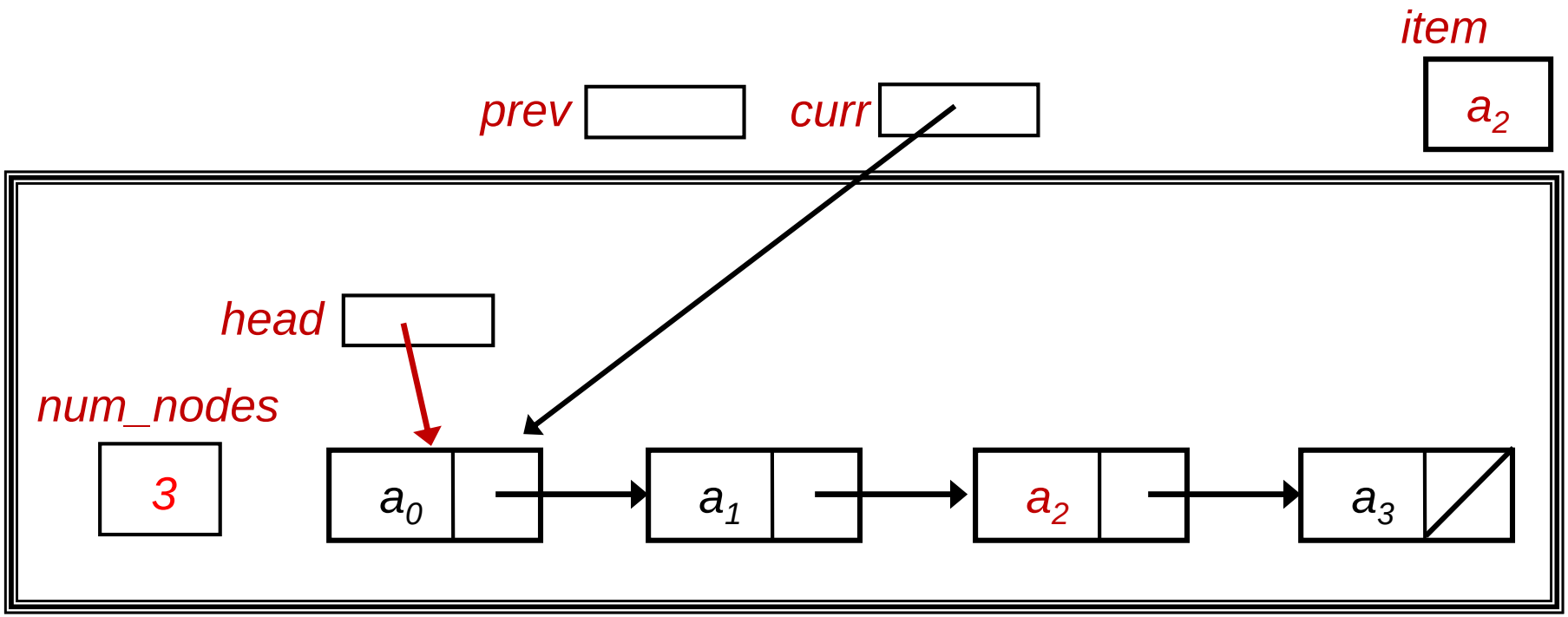

4.1 Enhanced Linked List (9/11)

```
public E remove(E item) throws ... {



}
```

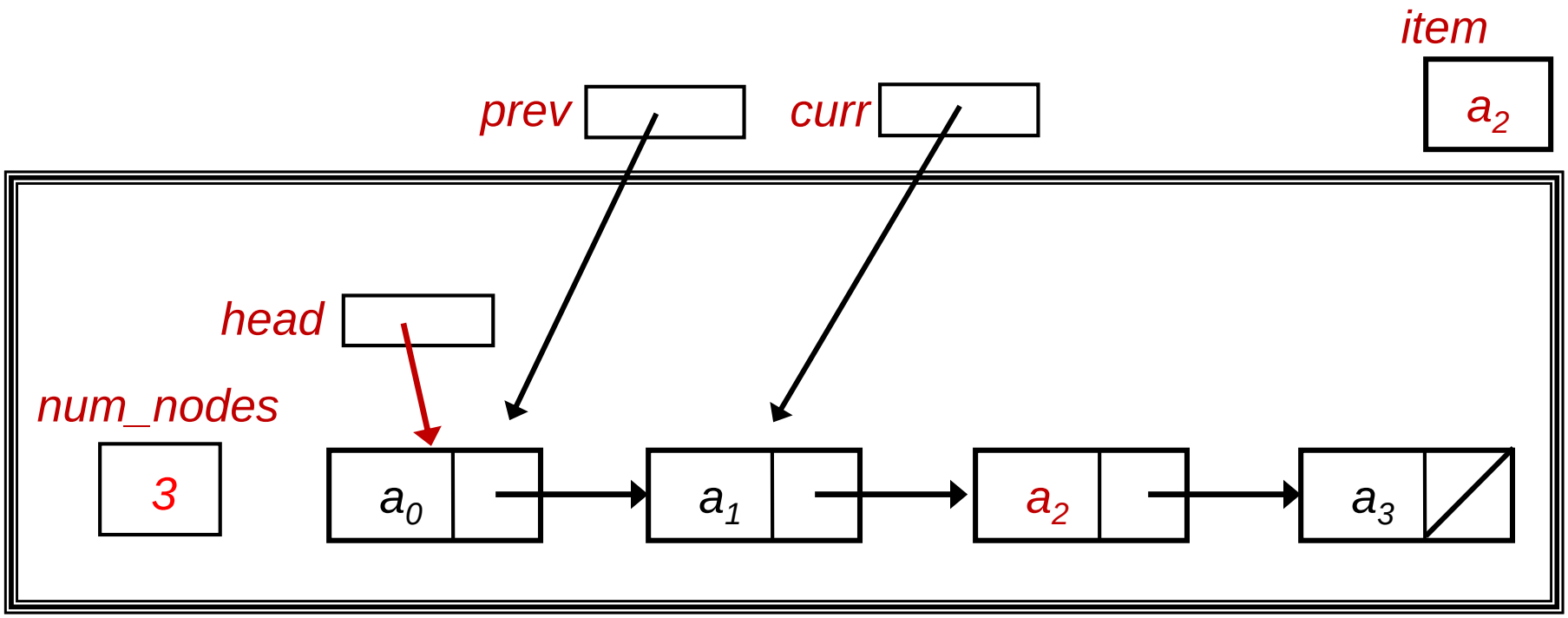

4.1 Enhanced Linked List (9/11)

```
public E remove(E item) throws ... {



}
```

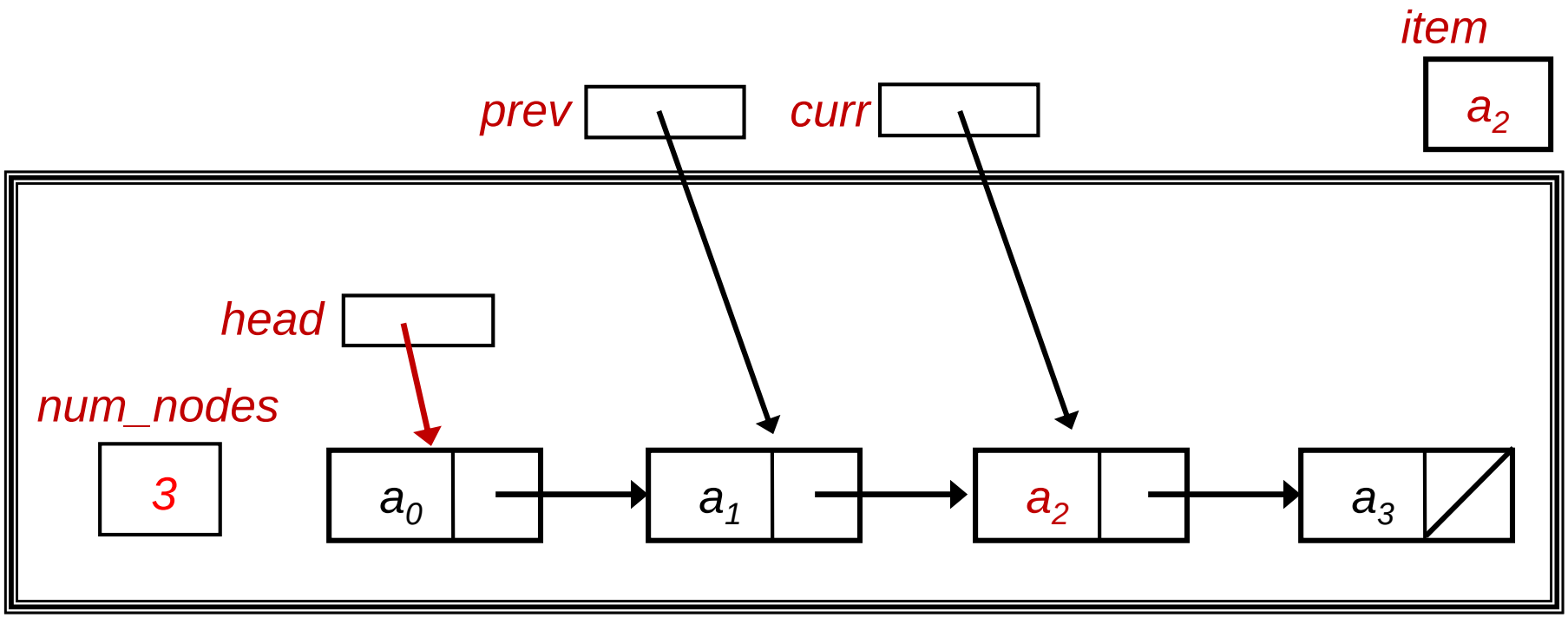

4.1 Enhanced Linked List (9/11)

```
public E remove(E item) throws ... {



}
```

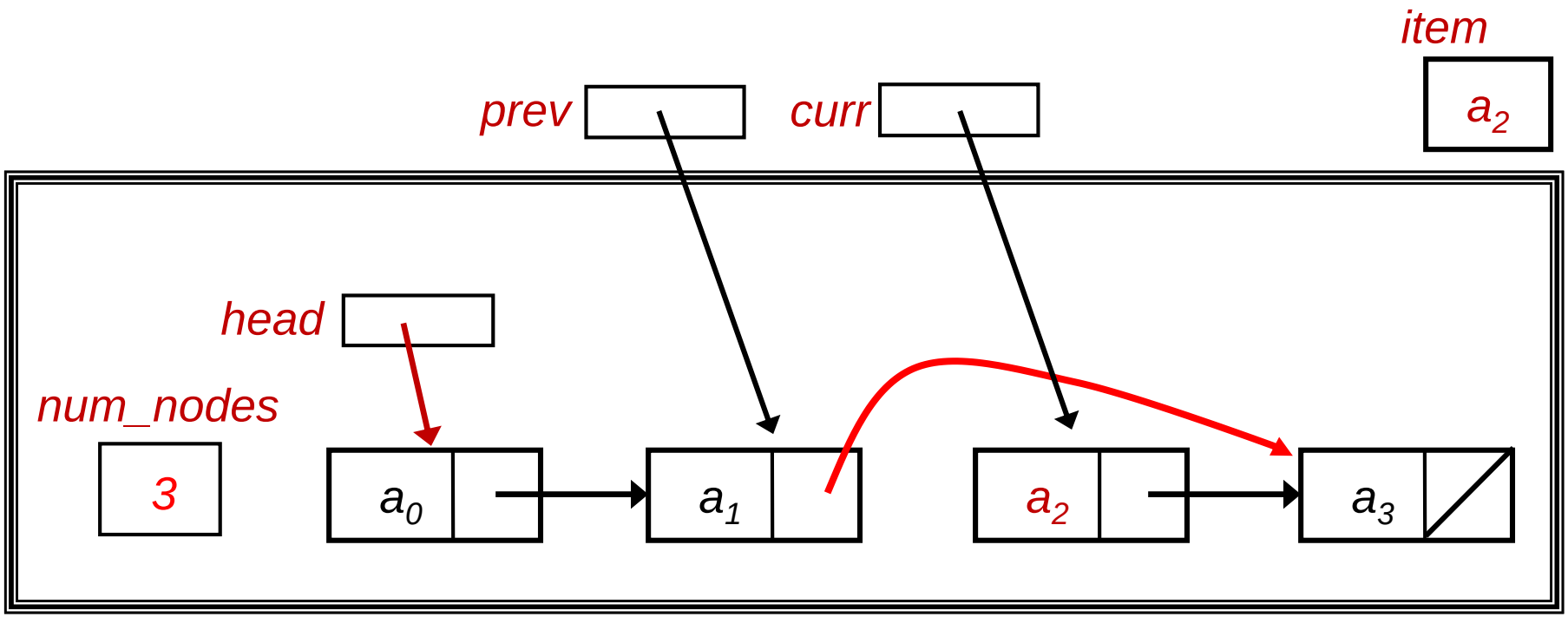

4.1 Test Enhanced Linked List (10/11)

TestEnhancedLinkedList.java

```
import java.util.*;

public class TestEnhancedLinkedList {
  public static void main(String [] args) throws EmptyListException {

    EnhancedLinkedList <String> list = new EnhancedLinkedList
<String>();
    System.out.println("Part 1");
    list.addFirst("aaa");
    list.addFirst("bbb");
    list.addFirst("ccc");
    list.print();


    System.out.println();
    System.out.println("Part 2");
    ListNode <String> current = list.getHead();
    list.addAfter(current, "xxx");
    list.addAfter(current, "yyy");
    list.print();
```

4.1 Test Enhanced Linked List (11/11)

TestEnhancedLinkedList.java

```
// (continue from previous slide)

    System.out.println();
    System.out.println("Part 3");
    current = list.getHead();
    if (current != null) {
      current = current.getNext();
      list.removeAfter(current);
    }
    list.print();

    System.out.println();
    System.out.println("Part 4");
    list.removeAfter(null);
    list.print();
  }
}
```

4. Linked Lists: Variants

OVERVIEW!

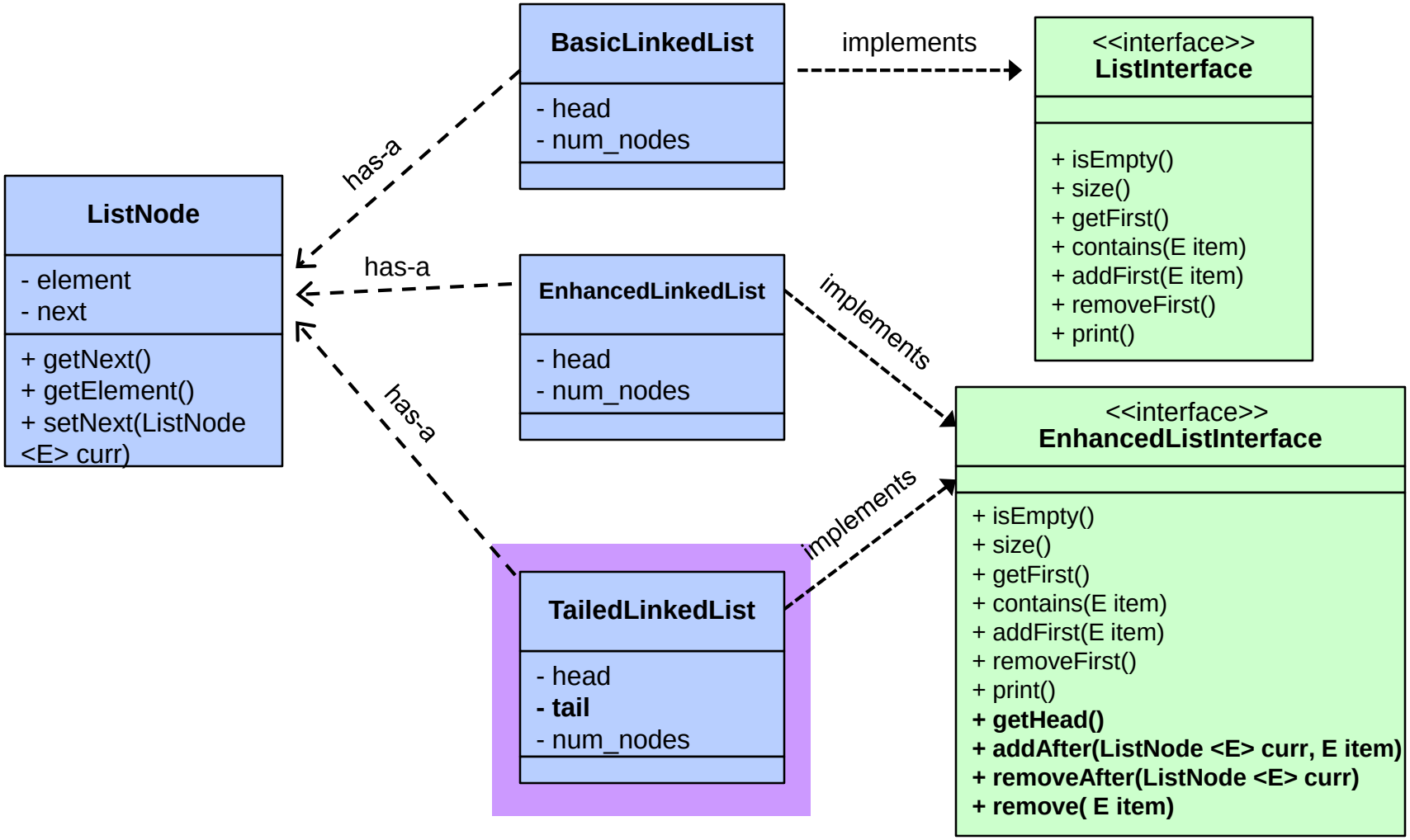

4.2 Tailed Linked List (1/10)

- We further improve on Enhanced Linked List
  - To address the issue that adding to the end is slow

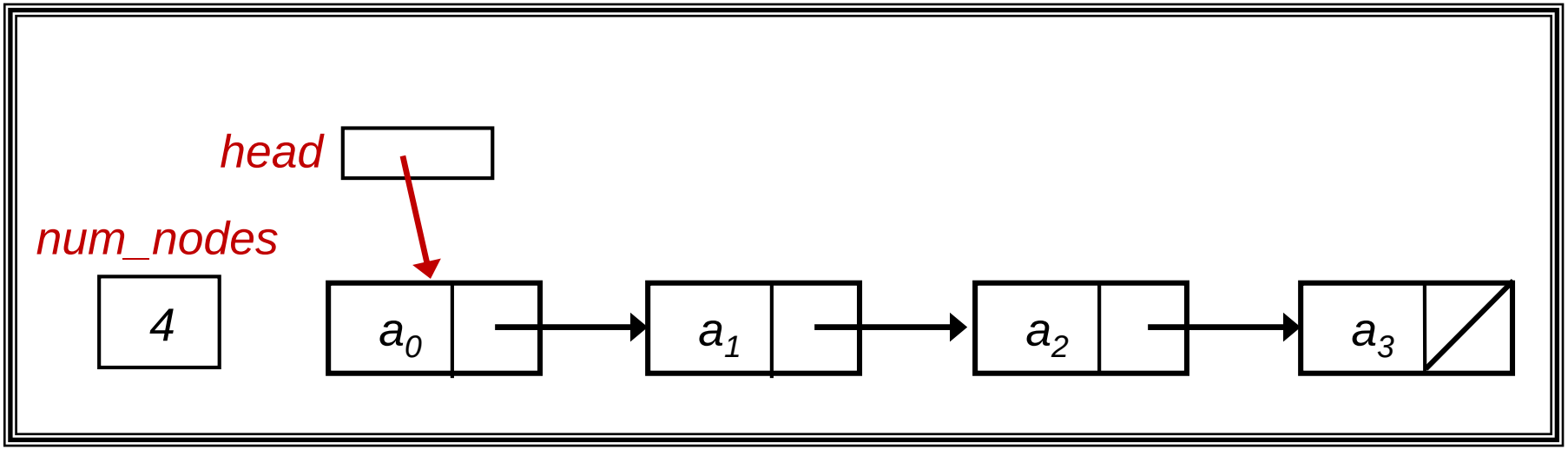

4.2 Tailed Linked List (1/10)

- We further improve on Enhanced Linked List
  - To address the issue that adding to the end is slow
  - Add an extra data member called tail

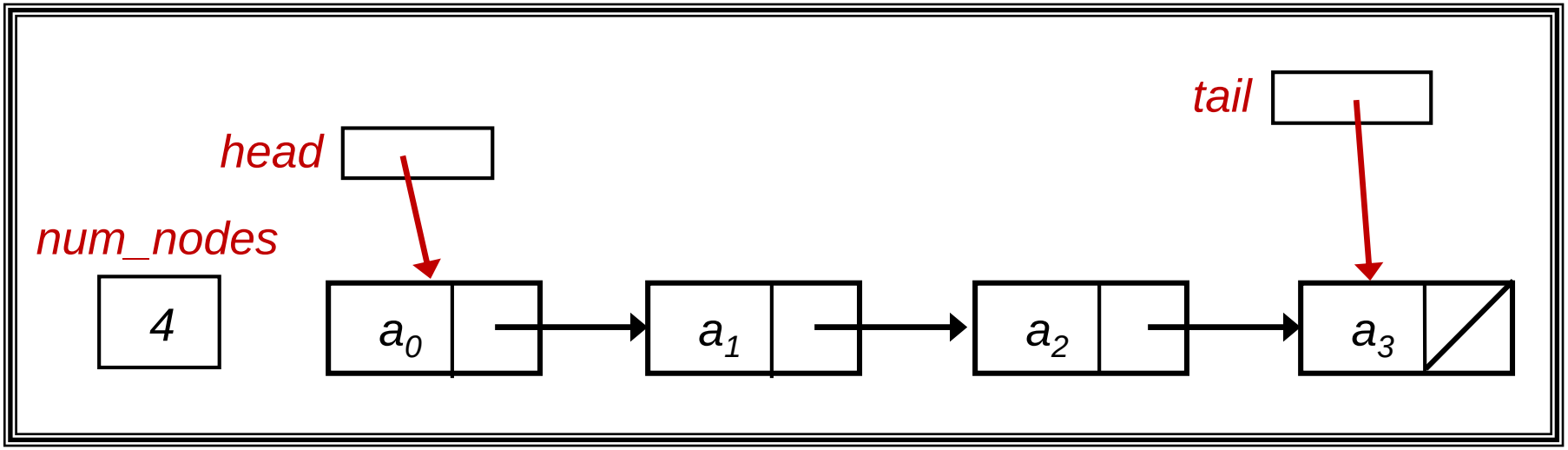

4.2 Tailed Linked List (1/10)

- We further improve on Enhanced Linked List
  - To address the issue that adding to the end is slow
  - Add an extra data member called tail
  - Extra data member means extra maintenance too – no free lunch!
  - (Note: We could have created this Tailed Linked List as a subclass of Enhanced Linked List, but here we will create it from scratch.)
- Difficulty: Learn to take care of ALL cases of updating...

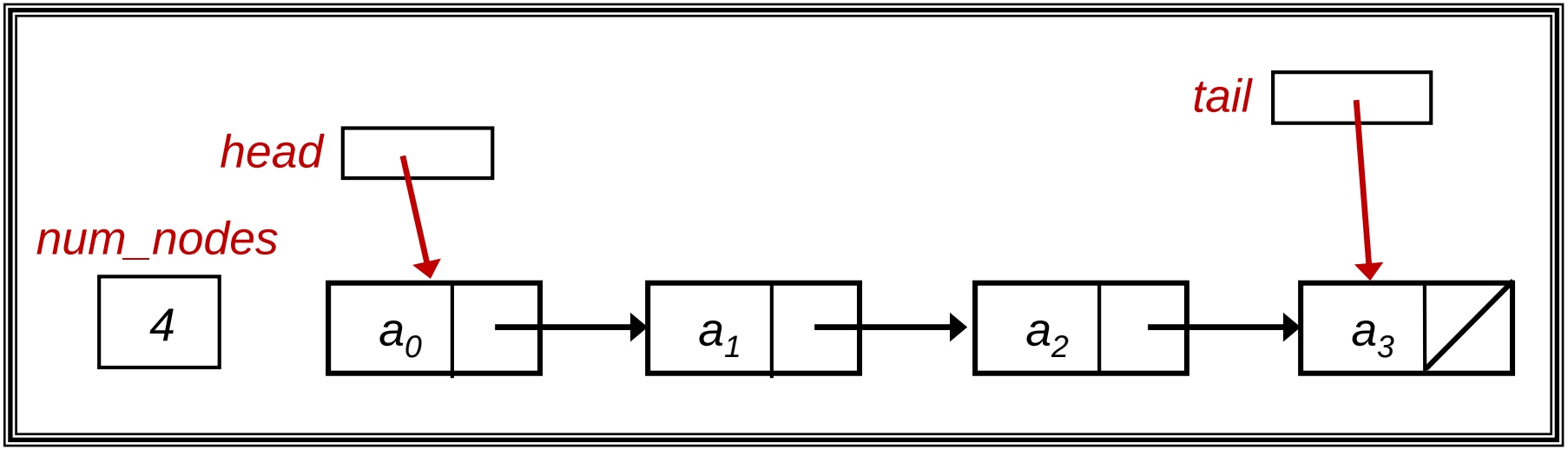

4.2 Tailed Linked List (2/10)

- A new data member: tail
- Extra maintenance needed, eg: see addFirst()

TailedLinkedList.java

```
import java.util.*;

class TailedLinkedList <E> implements EnhancedListInterface <E> {
  private ListNode <E> head = null;
  private ListNode <E> tail = null;
  private int num_nodes = 0;

  public ListNode <E> getTail() { return tail; }

  public void addFirst(E item) {
    head = new ListNode <E> (item, head);
    num_nodes++;
    if (num_nodes == 1)
      tail = head;
  }
```

New code

4.2 Tailed Linked List (3/10)

- With the new member tail, can add to the end of the list directly by creating a new method addLast()
  - Remember to update tail

TailedLinkedList.java

```
public void addLast(E item) {
   if (head != null) {
      tail.setNext(new ListNode <E> (item));
      tail = tail.getNext();
   } else {
      tail = new ListNode <E> (item);
      head = tail;
   }
   num_nodes++;
}
```

4.2 Tailed Linked List (4/10)

TailedLinkedList.java

```
public void addLast(E item) {
   if (head != null) {
      tail.setNext(new ListNode <E> (item));
      tail = tail.getNext();
   } else {
      tail = new ListNode <E> (item);
      head = tail;
   }
   num_nodes++;
}
```

4.2 Tailed Linked List (4/10)

TailedLinkedList.java

```
public void addLast(E item) {
   if (head != null) {
      tail.setNext(new ListNode <E> (item));
      tail = tail.getNext();
   } else {
      tail = new ListNode <E> (item);
      head = tail;
   }
   num_nodes++;
}
```

- Case 1: head != null

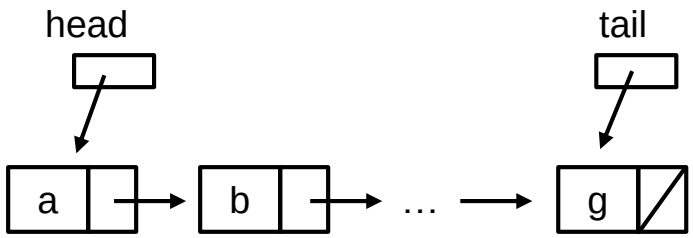

4.2 Tailed Linked List (4/10)

TailedLinkedList.java

```
public void addLast(E item) {
   if (head != null) {
      tail.setNext(new ListNode <E> (item));
      tail = tail.getNext();
   } else {
      tail = new ListNode <E> (item);
      head = tail;
   }
   num_nodes++;
}
```

- Case 1: head != null

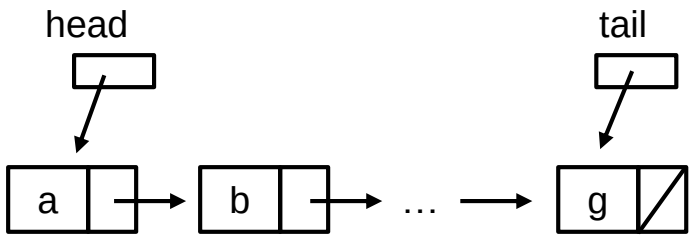

4.2 Tailed Linked List (4/10)

TailedLinkedList.java

```
public void addLast(E item) {
   if (head != null) {
      tail.setNext(new ListNode <E> (item));
      tail = tail.getNext();
   } else {
      tail = new ListNode <E> (item);
      head = tail;
   }
   num_nodes++;
}
```

- Case 1: head != null

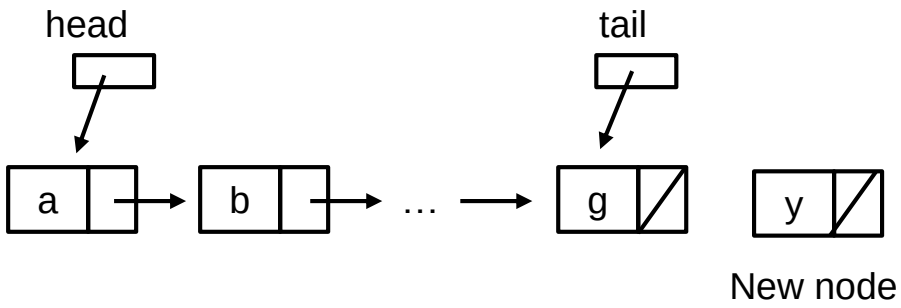

4.2 Tailed Linked List (4/10)

TailedLinkedList.java

```
public void addLast(E item) {
   if (head != null) {
      tail.setNext(new ListNode <E> (item));
      tail = tail.getNext();
   } else {
      tail = new ListNode <E> (item);
      head = tail;
   }
   num_nodes++;
}
```

- Case 1: head != null

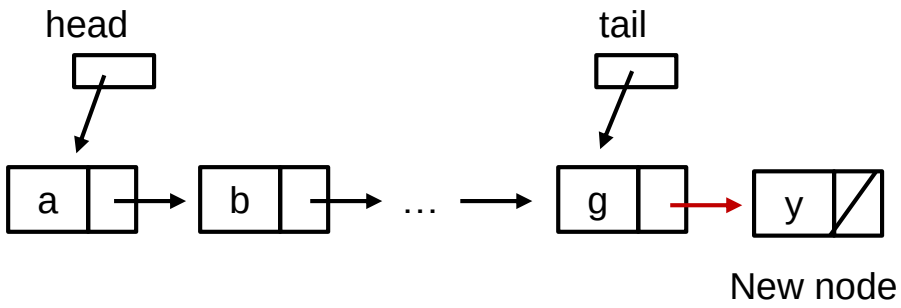

4.2 Tailed Linked List (4/10)

TailedLinkedList.java

```
public void addLast(E item) {
   if (head != null) {
      tail.setNext(new ListNode <E> (item));
      tail = tail.getNext();
   } else {
      tail = new ListNode <E> (item);
      head = tail;
   }
   num_nodes++;
}
```

- Case 1: head != null

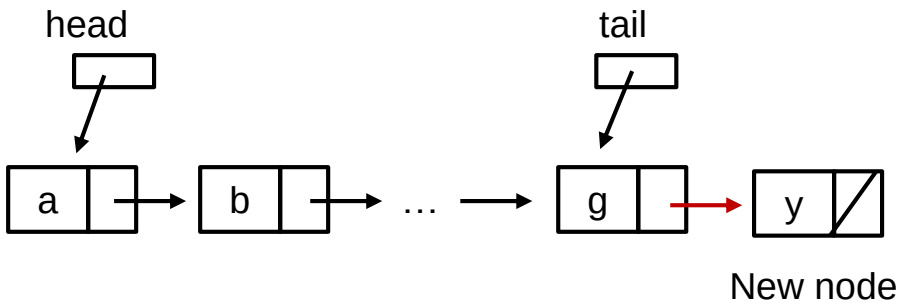

4.2 Tailed Linked List (4/10)

TailedLinkedList.java

```
public void addLast(E item) {
   if (head != null) {
      tail.setNext(new ListNode <E> (item));
      tail = tail.getNext();
   } else {
      tail = new ListNode <E> (item);
      head = tail;
   }
   num_nodes++;
}
```

- Case 1: head != null

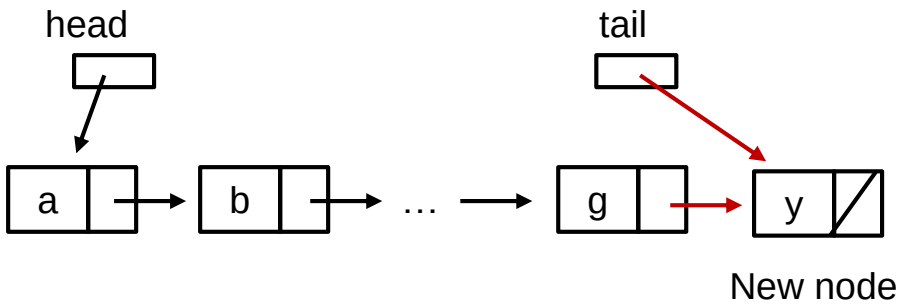

4.2 Tailed Linked List (4/10)

TailedLinkedList.java

```
public void addLast(E item) {
   if (head != null) {
      tail.setNext(new ListNode <E> (item));
      tail = tail.getNext();
   } else {
      tail = new ListNode <E> (item);
      head = tail;
   }
   num_nodes++;
}
```

- Case 1: head != null

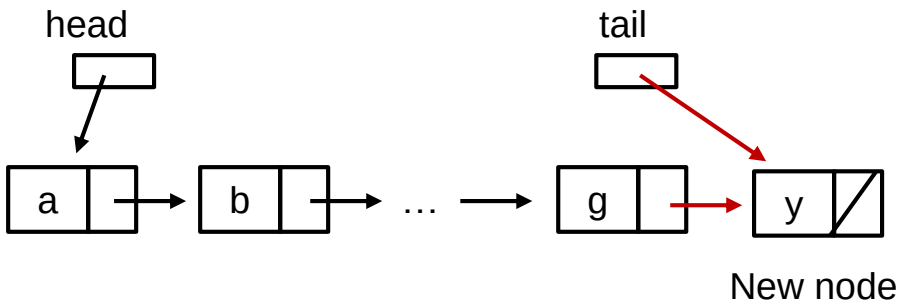

- Case 2: head == null

4.2 Tailed Linked List (4/10)

TailedLinkedList.java

```
public void addLast(E item) {
   if (head != null) {
      tail.setNext(new ListNode <E> (item));
      tail = tail.getNext();
   } else {
      tail = new ListNode <E> (item);
      head = tail;
   }
   num_nodes++;
}
```

- Case 1: head != null

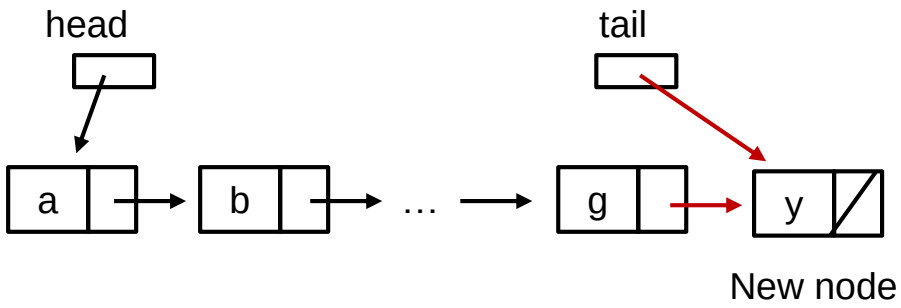

- Case 2: head == null

4.2 Tailed Linked List (4/10)

TailedLinkedList.java

```
public void addLast(E item) {
   if (head != null) {
      tail.setNext(new ListNode <E> (item));
      tail = tail.getNext();
   } else {
      tail = new ListNode <E> (item);
      head = tail;
   }
   num_nodes++;
}
```

- Case 1: head != null

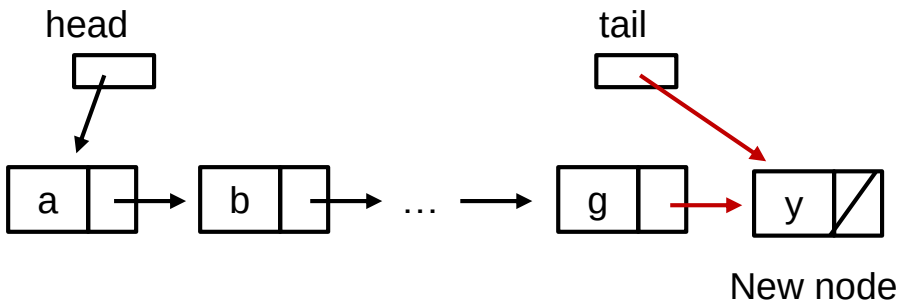

- Case 2: head == null

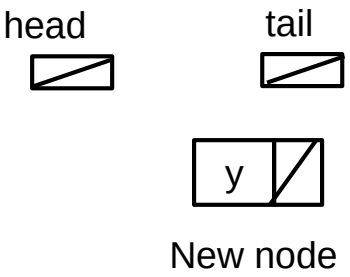

4.2 Tailed Linked List (4/10)

TailedLinkedList.java

```
public void addLast(E item) {
   if (head != null) {
      tail.setNext(new ListNode <E> (item));
      tail = tail.getNext();
   } else {
      tail = new ListNode <E> (item);
      head = tail;
   }
   num_nodes++;
}
```

- Case 1: head != null

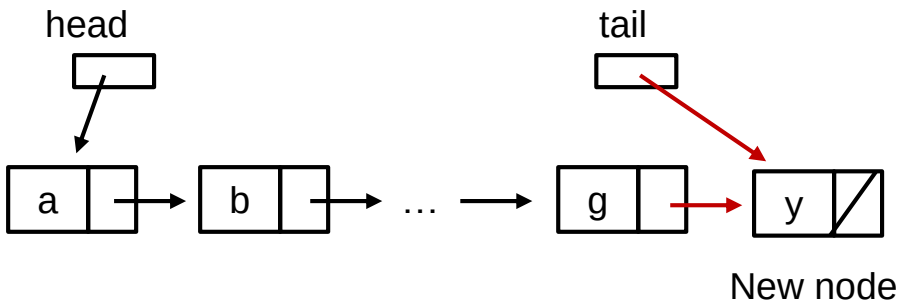

- Case 2: head == null

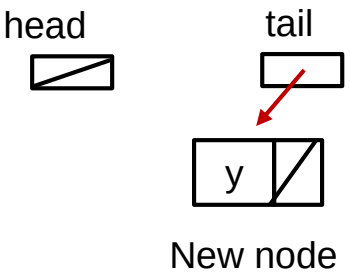

4.2 Tailed Linked List (4/10)

TailedLinkedList.java

```
public void addLast(E item) {
   if (head != null) {
      tail.setNext(new ListNode <E> (item));
      tail = tail.getNext();
   } else {
      tail = new ListNode <E> (item);
      head = tail;
   }
   num_nodes++;
}
```

- Case 1: head != null

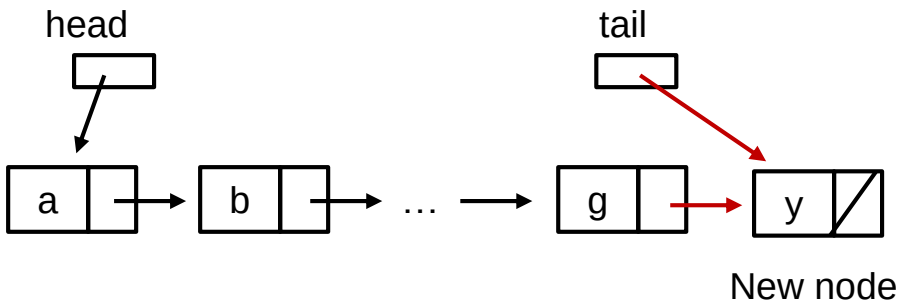

- Case 2: head == null

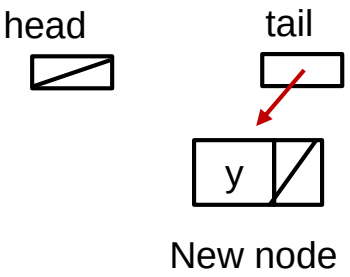

4.2 Tailed Linked List (4/10)

TailedLinkedList.java

```
public void addLast(E item) {
   if (head != null) {
      tail.setNext(new ListNode <E> (item));
      tail = tail.getNext();
   } else {
      tail = new ListNode <E> (item);
      head = tail;
   }
   num_nodes++;
}
```

- Case 1: head != null

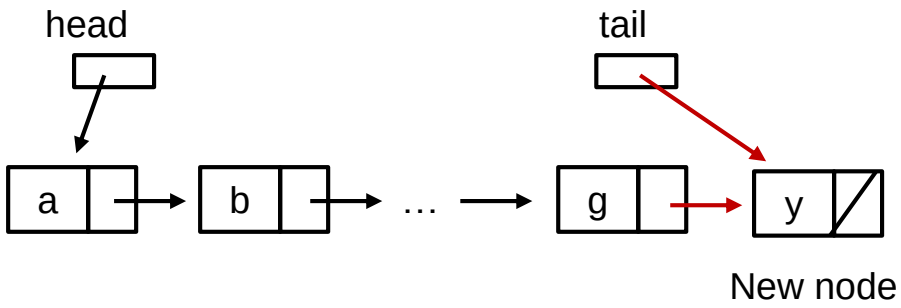

- Case 2: head == null

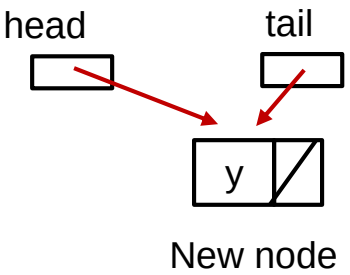

4.2 Tailed Linked List (5/10)

- addAfter() method

TailedLinkedList.java

```
public void addAfter(ListNode <E> current, E item) {
  if (current != null) {
    current.setNext(new ListNode <E> (item, current.getNext()));
    if (current == tail)
      tail = current.getNext();
  } else { // add to the front of the list
    head = new ListNode <E> (item, head);
    if (tail == null)
      tail = head;
  }
  num_nodes++;
}
```

We may replace our earlier addFirst() method (in slide 55) with a simpler one that merely calls addAfter(). How?

Hint: Study the removeFirst() method (slide 62).

4.2 Tailed Linked List (6/10)

TailedLinkedList.java

```
public void addAfter(ListNode <E> current, E item) {
   if (current != null) {
      current.setNext(new ListNode <E> (item, current.getNext()));
      if (current == tail)
         tail = current.getNext();
   } else {
      . . .
   }
   num_nodes++;
}
```

4.2 Tailed Linked List (6/10)

TailedLinkedList.java

```
public void addAfter(ListNode <E> current, E item) {
   if (current != null) {
      current.setNext(new ListNode <E> (item, current.getNext()));
      if (current == tail)
         tail = current.getNext();
   } else {
      . . .
   }
   num_nodes++;
}
```

- Case 1A
  - current != null; current != tail

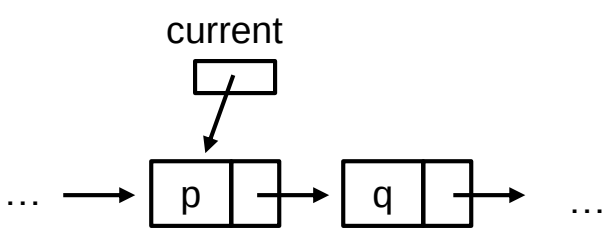

4.2 Tailed Linked List (6/10)

TailedLinkedList.java

```
public void addAfter(ListNode <E> current, E item) {
   if (current != null) {
      current.setNext(new ListNode <E> (item, current.getNext()));
      if (current == tail)
         tail = current.getNext();
   } else {
      . . .
   }
   num_nodes++;
}
```

- Case 1A
  - current != null; current != tail

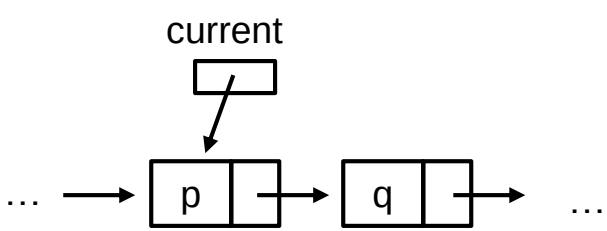

4.2 Tailed Linked List (6/10)

TailedLinkedList.java

```
public void addAfter(ListNode <E> current, E item) {
   if (current != null) {
      current.setNext(new ListNode <E> (item, current.getNext()));
      if (current == tail)
         tail = current.getNext();
   } else {
      . . .
   }
   num_nodes++;
}
```

- Case 1A
  - current != null; current != tail

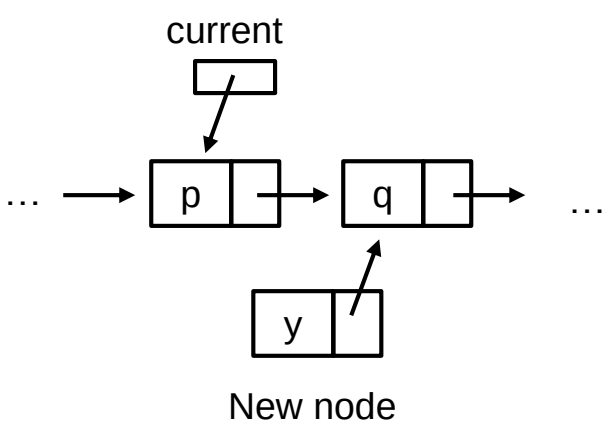

4.2 Tailed Linked List (6/10)

TailedLinkedList.java

```
public void addAfter(ListNode <E> current, E item) {
   if (current != null) {
      current.setNext(new ListNode <E> (item, current.getNext()));
      if (current == tail)
         tail = current.getNext();
   } else {
      . . .
   }
   num_nodes++;
}
```

- Case 1A
  - current != null; current != tail

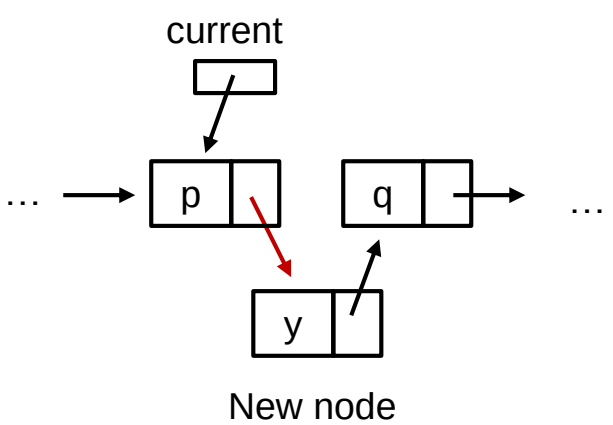

4.2 Tailed Linked List (6/10)

TailedLinkedList.java

```
public void addAfter(ListNode <E> current, E item) {
   if (current != null) {
      current.setNext(new ListNode <E> (item, current.getNext()));
      if (current == tail)
         tail = current.getNext();
   } else {
      . . .
   }
   num_nodes++;
}
```

- Case 1A
  - current != null; current != tail

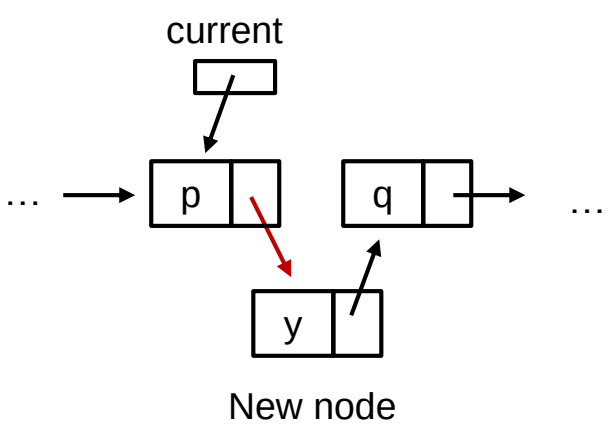

- Case 1B
  - current != null; current == tail

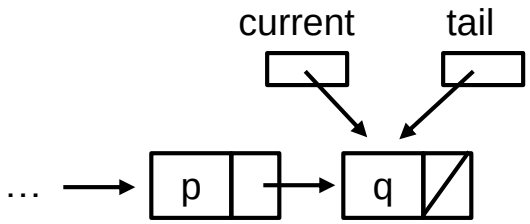

4.2 Tailed Linked List (6/10)

TailedLinkedList.java

```
public void addAfter(ListNode <E> current, E item) {
   if (current != null) {
      current.setNext(new ListNode <E> (item, current.getNext()));
      if (current == tail)
         tail = current.getNext();
   } else {
      . . .
   }
   num_nodes++;
}
```

- Case 1A
  - current != null; current != tail

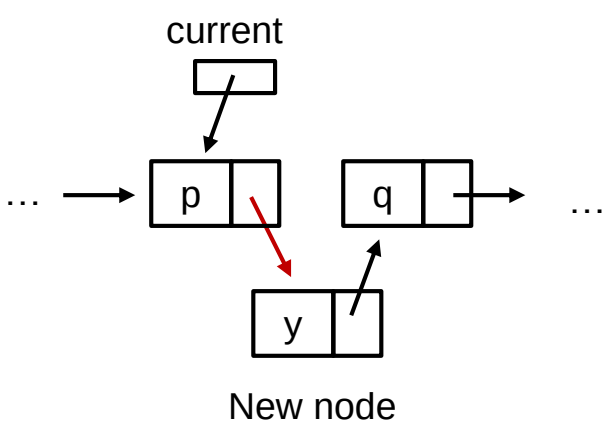

- Case 1B
  - current != null; current == tail

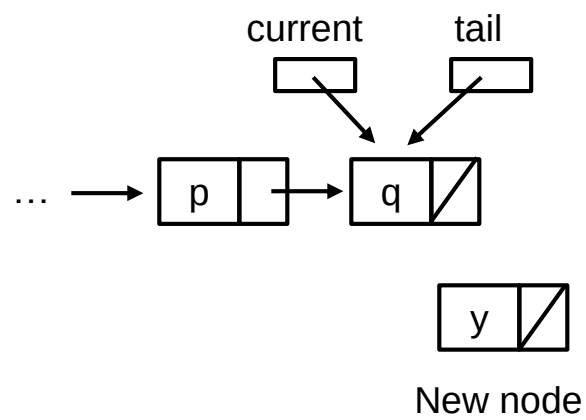

4.2 Tailed Linked List (6/10)

TailedLinkedList.java

```
public void addAfter(ListNode <E> current, E item) {
   if (current != null) {
      current.setNext(new ListNode <E> (item, current.getNext()));
      if (current == tail)
         tail = current.getNext();
   } else {
      . . .
   }
   num_nodes++;
}
```

- Case 1A
  - current != null; current != tail

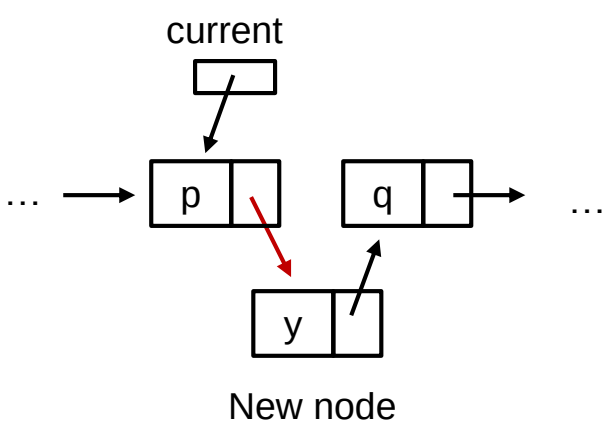

- Case 1B
  - current != null; current == tail

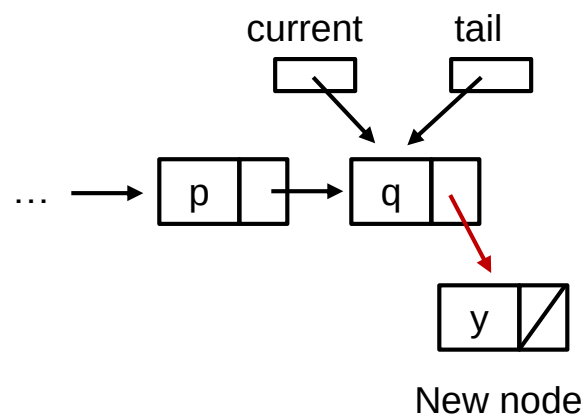

4.2 Tailed Linked List (6/10)

TailedLinkedList.java

```
public void addAfter(ListNode <E> current, E item) {
   if (current != null) {
      current.setNext(new ListNode <E> (item, current.getNext()));
      if (current == tail)
         tail = current.getNext();
   } else {
      . . .
   }
   num_nodes++;
}
```

- Case 1A
  - current != null; current != tail

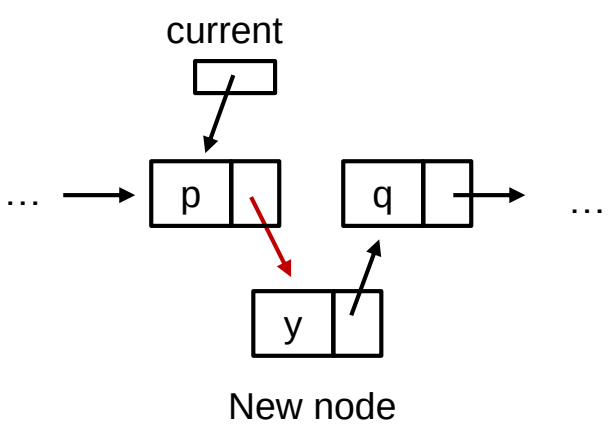

- Case 1B
  - current != null; current == tail

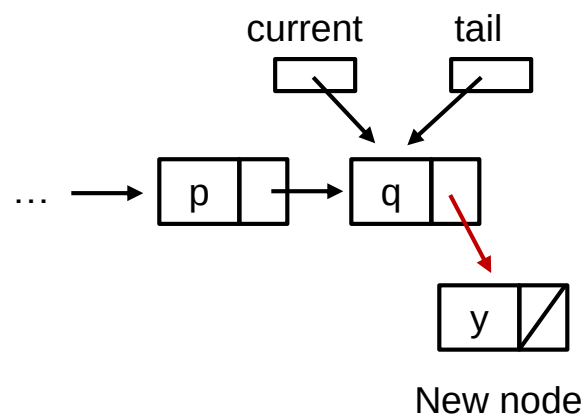

4.2 Tailed Linked List (6/10)

TailedLinkedList.java

```
public void addAfter(ListNode <E> current, E item) {
   if (current != null) {
      current.setNext(new ListNode <E> (item, current.getNext()));
      if (current == tail)
         tail = current.getNext();
   } else {
      . . .
   }
   num_nodes++;
}
```

- Case 1A
  - current != null; current != tail

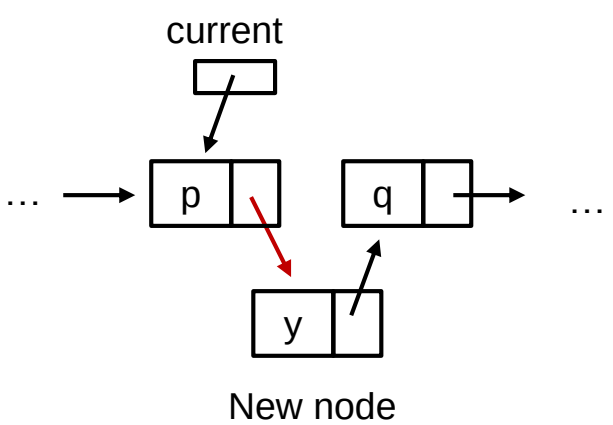

- Case 1B
  - current != null; current == tail

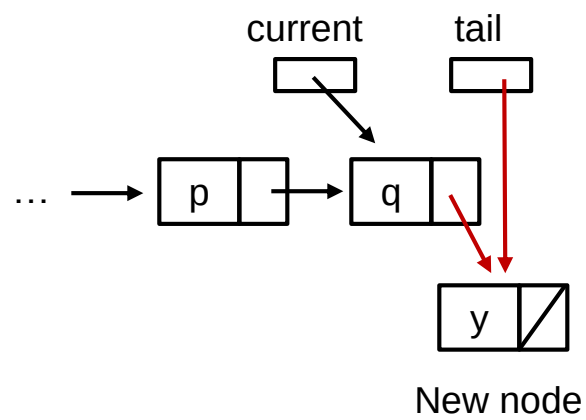

4.2 Tailed Linked List (7/10)

TailedLinkedList.java

```
public void addAfter(ListNode <E> current, E item) {
   if (current != null) {
      . . .
   } else { // add to the front of the list
      head = new ListNode <E> (item, head);
      if (tail == null)
         tail = head;
   }
   num_nodes++;
}
```

4.2 Tailed Linked List (7/10)

TailedLinkedList.java

```
public void addAfter(ListNode <E> current, E item) {
   if (current != null) {
      . . .
   } else { // add to the front of the list
      head = new ListNode <E> (item, head);
      if (tail == null)
         tail = head;
   }
   num_nodes++;
}
```

- Case 2A
  - current == null; tail != null

4.2 Tailed Linked List (7/10)

TailedLinkedList.java

```
public void addAfter(ListNode <E> current, E item) {
   if (current != null) {
      . . .
   } else { // add to the front of the list
      head = new ListNode <E> (item, head);
      if (tail == null)
         tail = head;
   }
   num_nodes++;
}
```

- Case 2A
  - current == null; tail != null

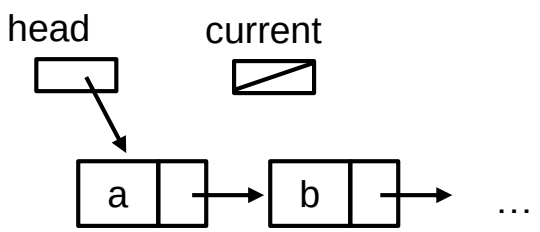

4.2 Tailed Linked List (7/10)

TailedLinkedList.java

```
public void addAfter(ListNode <E> current, E item) {
   if (current != null) {
      . . .
   } else { // add to the front of the list
      head = new ListNode <E> (item, head);
      if (tail == null)
         tail = head;
   }
   num_nodes++;
}
```

- Case 2A
  - current == null; tail != null

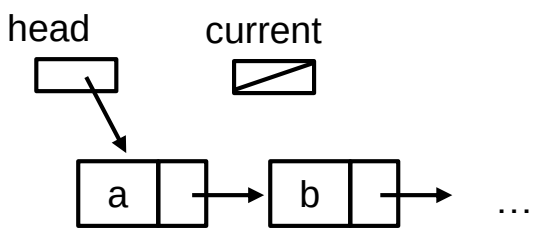

4.2 Tailed Linked List (7/10)

TailedLinkedList.java

```
public void addAfter(ListNode <E> current, E item) {
   if (current != null) {
      . . .
   } else { // add to the front of the list
      head = new ListNode <E> (item, head);
      if (tail == null)
         tail = head;
   }
   num_nodes++;
}
```

- Case 2A
  - current == null; tail != null

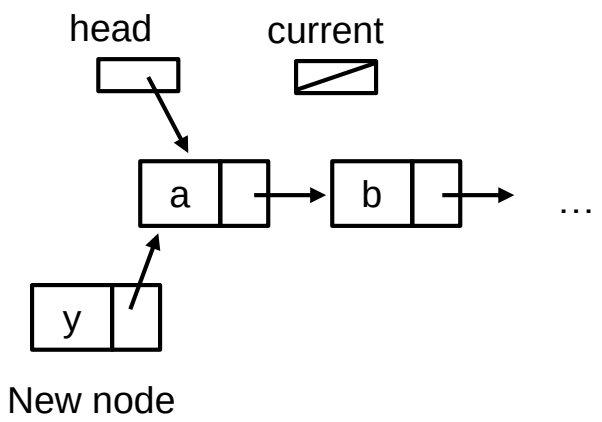

4.2 Tailed Linked List (7/10)

TailedLinkedList.java

```
public void addAfter(ListNode <E> current, E item) {
   if (current != null) {
      . . .
   } else { // add to the front of the list
      head = new ListNode <E> (item, head);
      if (tail == null)
         tail = head;
   }
   num_nodes++;
}
```

- Case 2A
  - current == null; tail != null

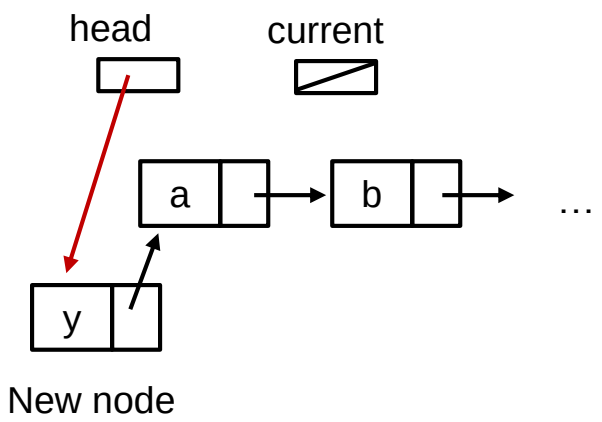

4.2 Tailed Linked List (7/10)

TailedLinkedList.java

```
public void addAfter(ListNode <E> current, E item) {
   if (current != null) {
      . . .
   } else { // add to the front of the list
      head = new ListNode <E> (item, head);
      if (tail == null)
         tail = head;
   }
   num_nodes++;
}
```

- Case 2A
  - current == null; tail != null

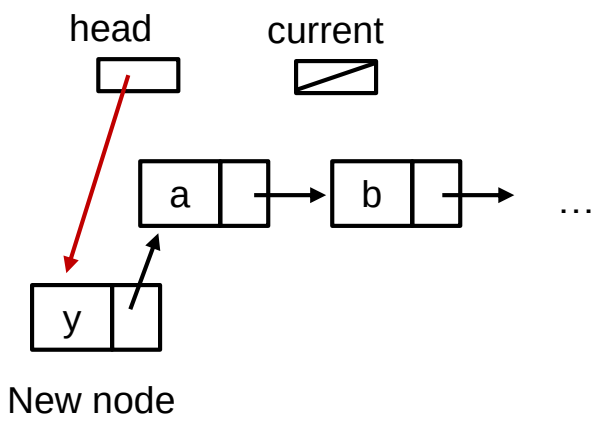

- Case 2B
  - current == null; tail == null

4.2 Tailed Linked List (7/10)

TailedLinkedList.java

```
public void addAfter(ListNode <E> current, E item) {
   if (current != null) {
      . . .
   } else { // add to the front of the list
      head = new ListNode <E> (item, head);
      if (tail == null)
         tail = head;
   }
   num_nodes++;
}
```

- Case 2A
  - current == null; tail != null

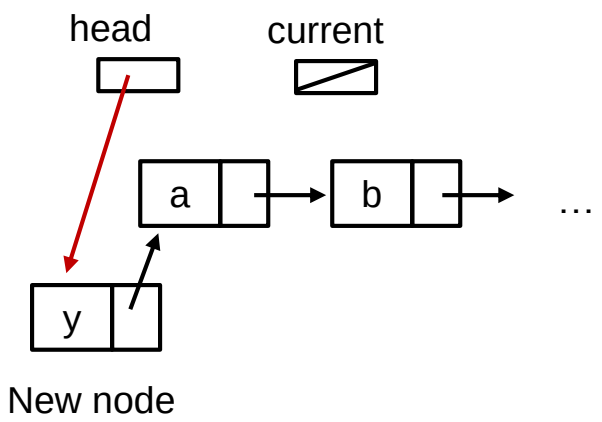

- Case 2B
  - current == null; tail == null

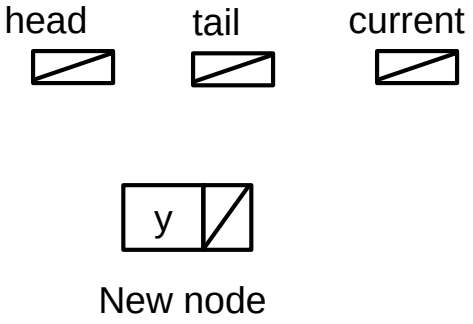

4.2 Tailed Linked List (7/10)

TailedLinkedList.java

```
public void addAfter(ListNode <E> current, E item) {
   if (current != null) {
      . . .
   } else { // add to the front of the list
      head = new ListNode <E> (item, head);
      if (tail == null)
         tail = head;
   }
   num_nodes++;
}
```

- Case 2A
  - current == null; tail != null

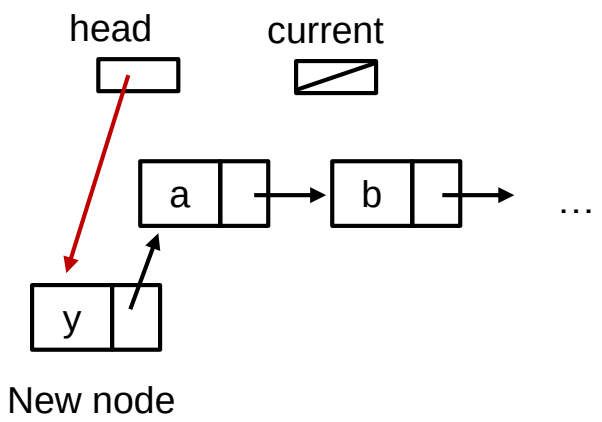

- Case 2B
  - current == null; tail == null

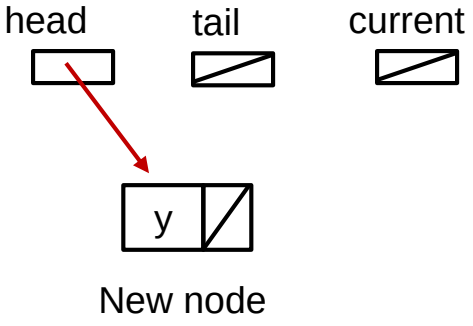

4.2 Tailed Linked List (7/10)

TailedLinkedList.java

```
public void addAfter(ListNode <E> current, E item) {
   if (current != null) {
      . . .
   } else { // add to the front of the list
      head = new ListNode <E> (item, head);
      if (tail == null)
         tail = head;
   }
   num_nodes++;
}
```

- Case 2A
  - current == null; tail != null

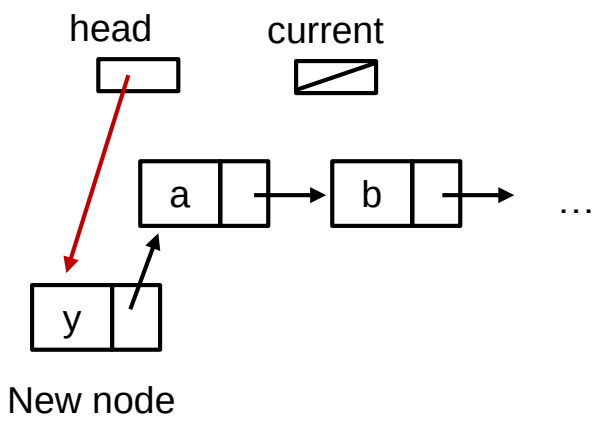

- Case 2B
  - current == null; tail == null

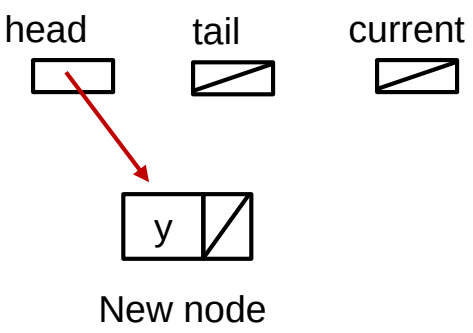

4.2 Tailed Linked List (7/10)

TailedLinkedList.java

```
public void addAfter(ListNode <E> current, E item) {
   if (current != null) {
      . . .
   } else { // add to the front of the list
      head = new ListNode <E> (item, head);
      if (tail == null)
         tail = head;
   }
   num_nodes++;
}
```

- Case 2A
  - current == null; tail != null

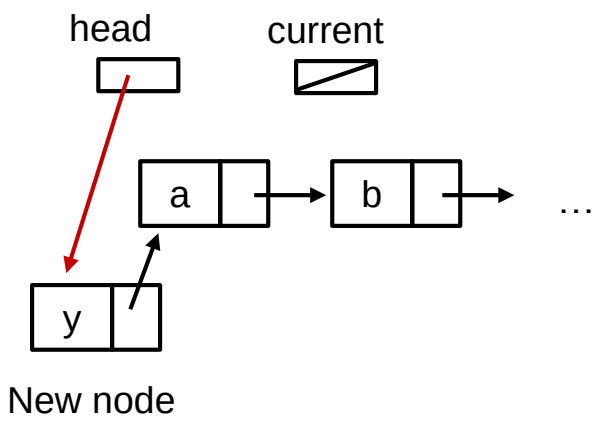

- Case 2B
  - current == null; tail == null

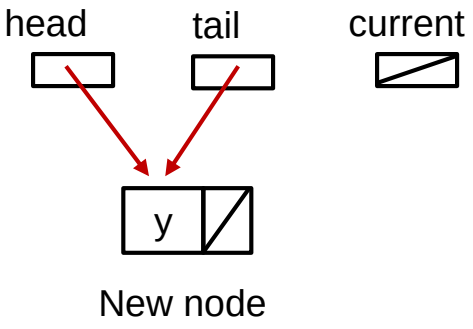

4.2 Tailed Linked List (8/10)

- removeAfter() method

TailedLinkedList.java

```
public E removeAfter(ListNode <E> current)
                    throws EmptyListException {
   E temp;
   if (current != null) {
      ListNode <E> nextPtr = current.getNext();
      if (nextPtr != null) {
         temp = nextPtr.getElement();
         current.setNext(nextPtr.getNext());
         num_nodes--;
         if (nextPtr.getNext() == null) // last node is removed
            tail = current;
         return temp;
      else throw new EmptyListException("...");
   else { // if current == null, we want to remove head
      if (head != null) {
         temp = head.getElement();
         head = head.getNext();
         num_nodes--;
         if (head == null) tail = null;
         return temp;
      } else throw new EmptyListException("...");
   }
}
```

4.2 Tailed Linked List (9/10)

- removeFirst() method
  - removeFirst() is a special case in removeAfter()

```
public E removeFirst() throws EmptyListException {
   return removeAfter(null);
}
```

TailedLinkedList.java

- Study the full program TailedLinkedList.java on the module website on your own.

4.2 Test Tailed Linked List (10/10)

TestTailedLinkedList.java

```
import java.util.*;

public class TestTailedLinkedList {
   public static void main(String [] args) throws EmptyListException {
      TailedLinkedList <String> list = new TailedLinkedList <String>();

      System.out.println("Part 1");
      list.addFirst("aaa");
      list.addFirst("bbb");
      list.addFirst("ccc");
      list.print();
      System.out.println("Part 2");
      list.addLast("xxx");
      list.print();
      System.out.println("Part 3");
      list.removeAfter(null);
      list.print();
   }
}
```

4. Linked Lists: Variants

OVERVIEW!

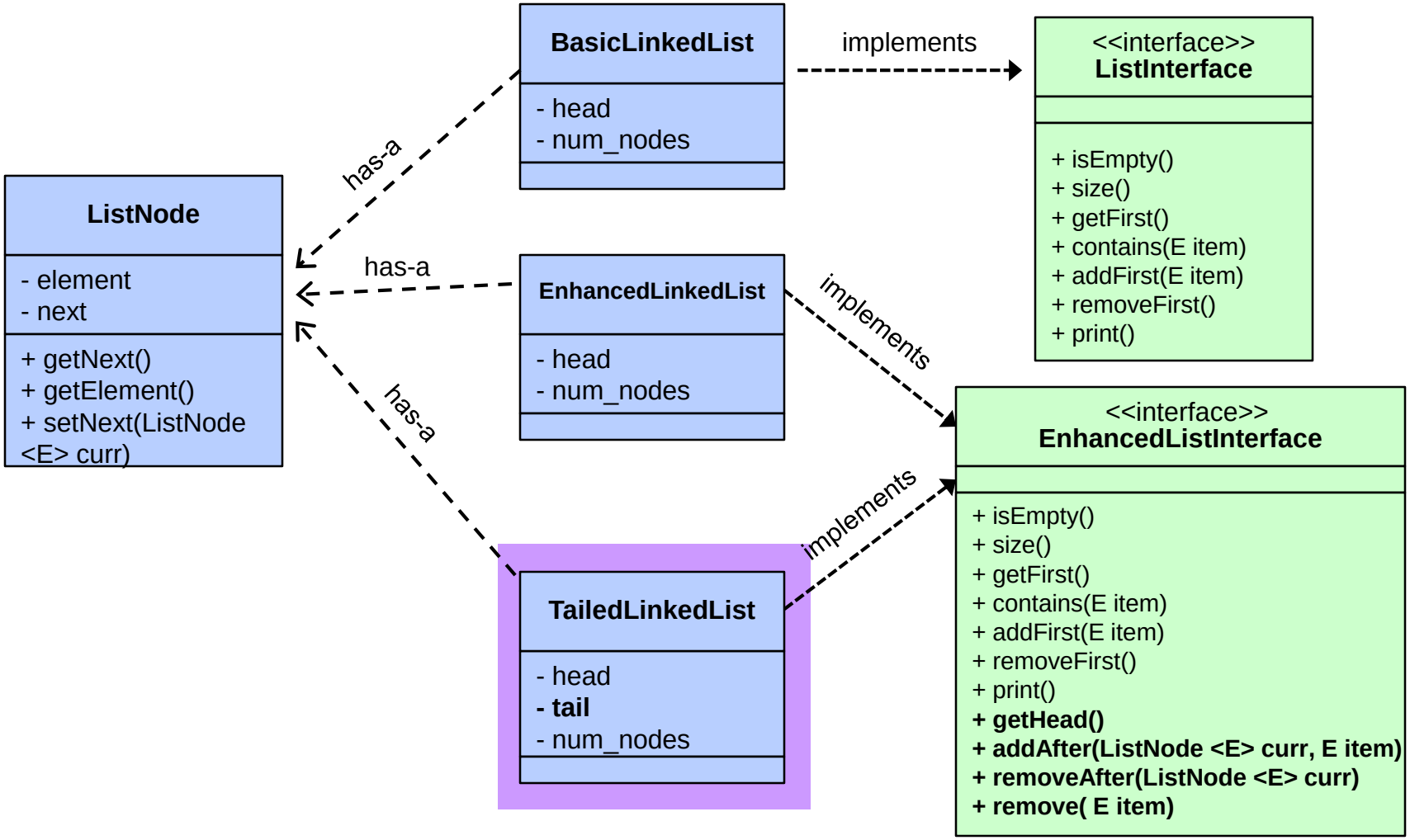

4. Linked Lists: Variants

OVERVIEW!

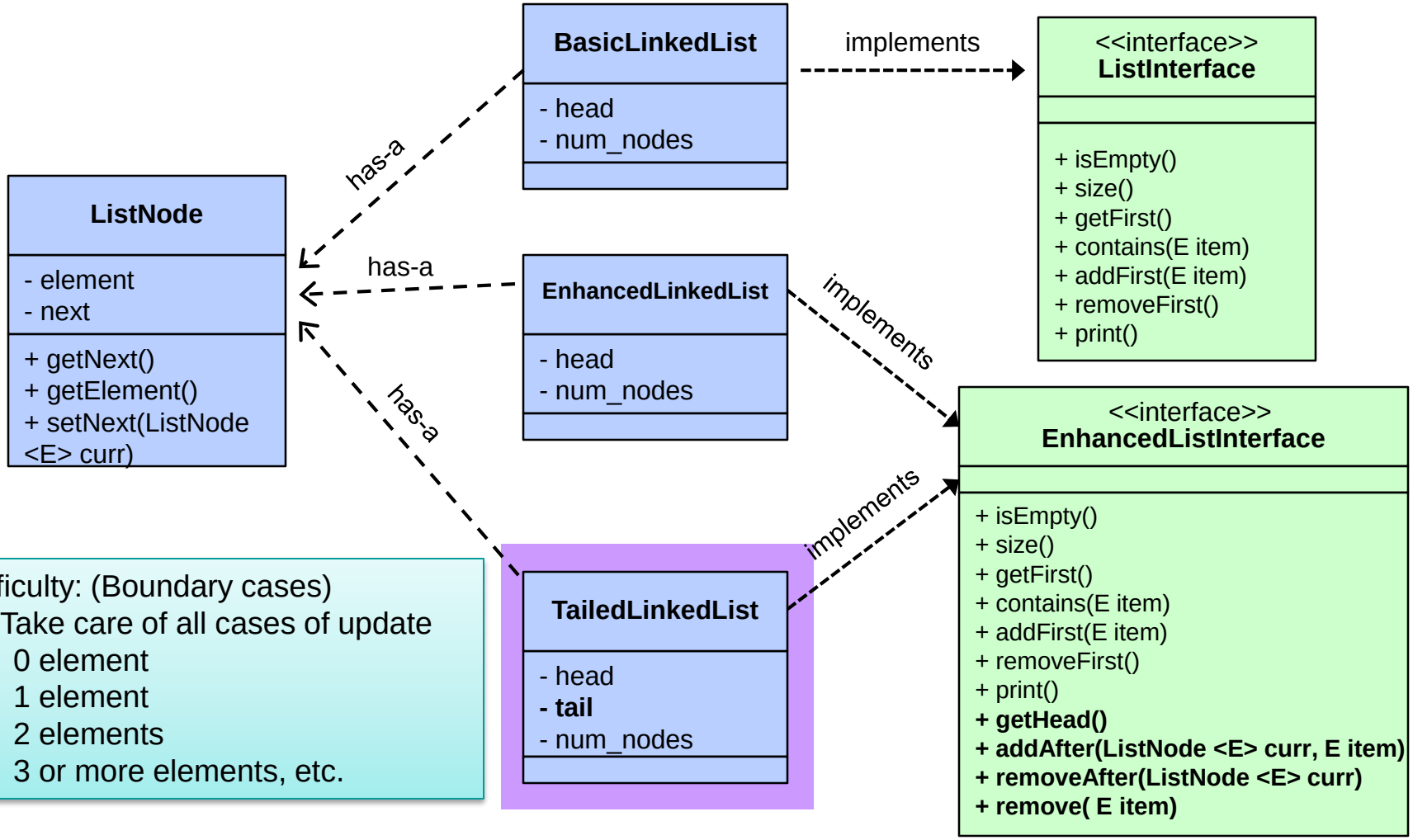

Difficulty: (Boundary cases)

Take care of all cases of update

0 element

1 element

2 elements

3 or more elements, etc.

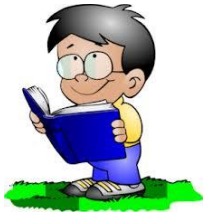

5 Other Variants

Other variants of linked lists

5.1 Circular Linked List

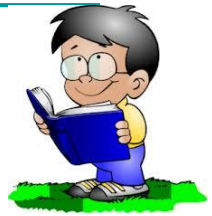

- There are many other possible enhancements of linked list

5.1 Circular Linked List

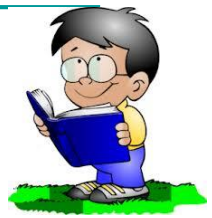

- There are many other possible enhancements of linked list
- Example: Circular Linked List
  - To allow cycling through the list repeatedly, e.g. in a **round robin system** to assign shared resource
  - Add a link from tail node of the TailedLinkedList to point back to head node
  - Different in linking need different maintenance – no free lunch!

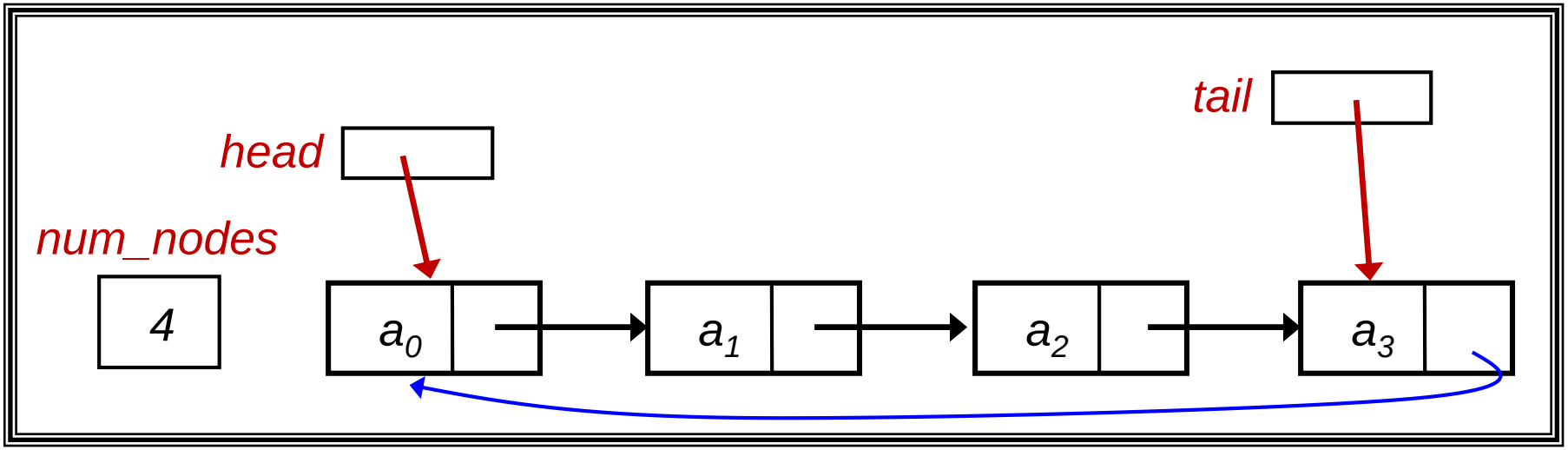

5.1 Circular Linked List

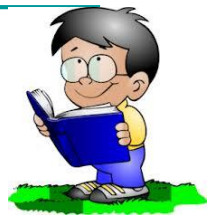

- There are many other possible enhancements of linked list
- Example: Circular Linked List
  - To allow cycling through the list repeatedly, e.g. in a **round robin system** to assign shared resource
  - Add a link from tail node of the TailedLinkedList to point back to head node
  - Different in linking need different maintenance – no free lunch!
- Difficulty: Learn to take care of ALL cases of updating, such as inserting/deleting the first/last node in a Circular Linked List
- Explore this on your own; write a class CircularLinkedList

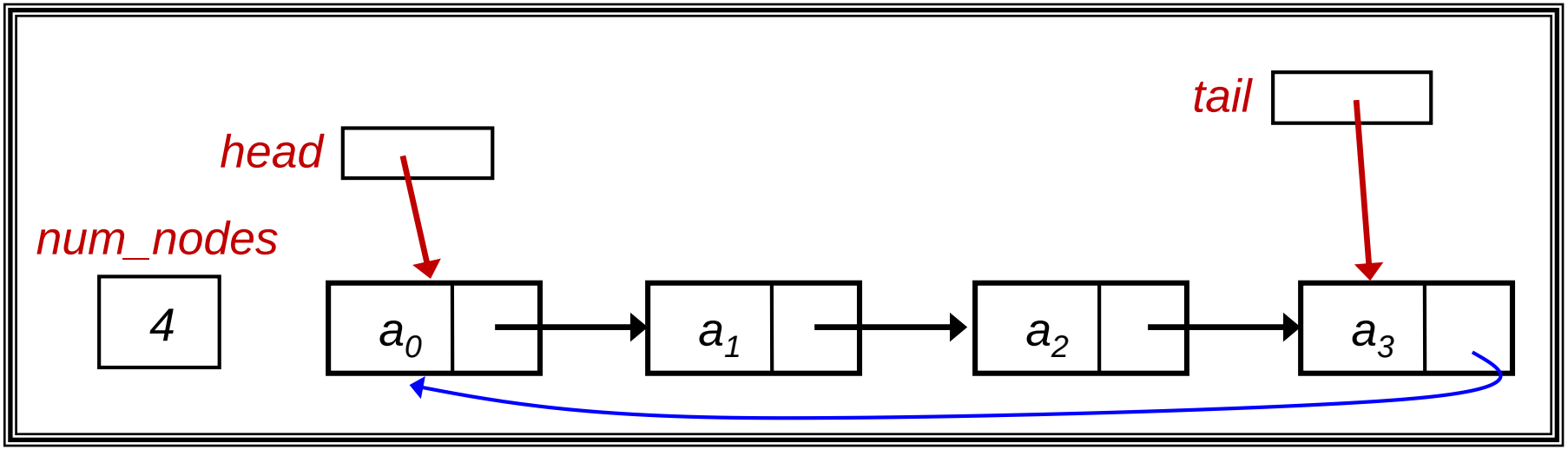

5.2 Doubly Linked List (1/3)

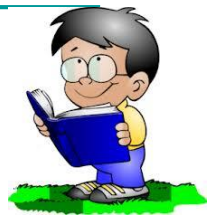

- In the preceding discussion, we have a "**next**" pointer to move forward
- Often, we need to move backward as well
- Use a "**prev**" pointer to allow backward traversal
- Once again, no free lunch – need to maintain "**prev**" in all updating methods
- Instead of ListNode class, need to create a DListNode class that includes the additional "**prev**" pointer

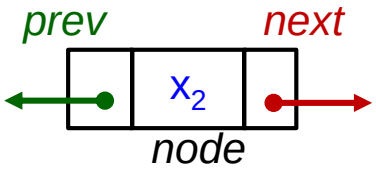

5.2 Doubly Linked List: DListNode (2/3)

DListNode.java

```
class DListNode <E> {
  /* data attributes */
  private E element;
  private DListNode <E> prev;
  private DListNode <E> next;

  /* constructors */
  public DListNode(E item) { this(item, null, null); }

  public DListNode(E item, DListNode <E> p, DListNode <E> n) {
    element = item; prev = p; next = n;
  }

  /* get the prev DListNode */
  public DListNode <E> getPrev() { return this.prev; }
  /* get the next DListNode */
  public DListNode <E> getNext() { return this.next; }

  /* get the element of the ListNode */
  public E getElement() { return this.element; }

  /* set the prev reference */
  public void setPrev(DListNode <E> p) { prev = p };
  /* set the next reference */
  public void setNext(DListNode <E> n) { next = n };
}
```

5.2 Doubly Linked List (3/3)

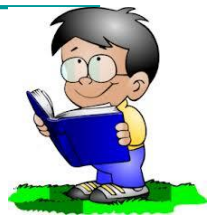

- An example of a doubly linked list

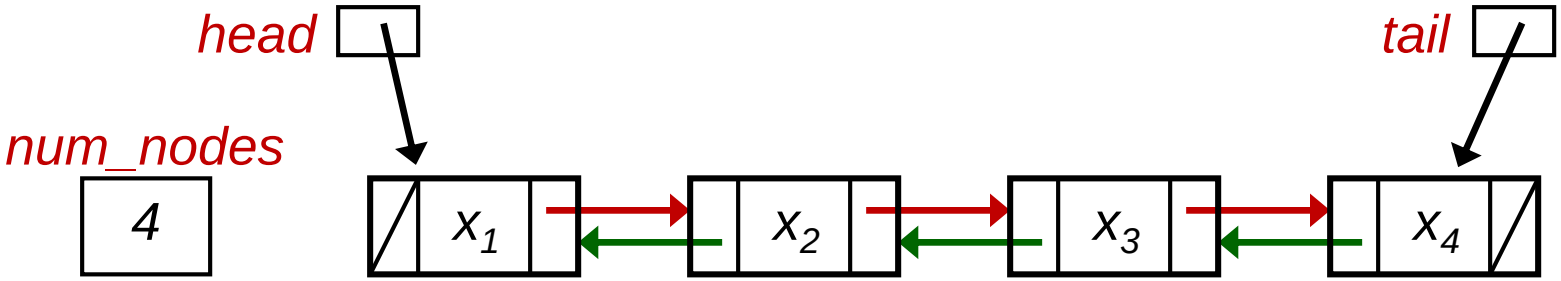

- Explore this on your own.
- Write a class DoublyLinkedList to implement the various linked list operations for a doubly linked list.

8 Practice Exercises

- Exercise: List Reversal
- Exercise: Sorted Linked List

9 Visualising Data Structures

- See http://visualgo.net
  - Click on “Linked List, Stack, Queue”

- See http://www.cs.usfca.edu/~galles/visualization/Algorithms.html